Stage 03: Attachment A – Detailed Assessment for P237

What stage is this document in the process?

01 Initial Written Assessment

02 Definition Procedure

03 Assessment Procedure

04 Report Phase

P237: Standard BM Unit configuration for Offshore Power Park Modules

Contents

1 Background & Related Changes 2

2 Worked Examples: Extent of Issue & P237 Benefits 4

3 Assessment Consultation Responses 12

4 Group's Membership, Terms of Reference & Timetable 13

About This Document:

This is Attachment A to the P237 Assessment Report.

ELEXON has updated this attachment for the Draft Modification Report, to give further clarity on how Offshore Power Park Modules are treated compared with Onshore Power Park Modules.

This document explains how the Group's discussions have led it to its recommendations. It also includes a summary of the industry responses to the Group's consultation.

You can download copies of the full industry consultation responses and the Transmission Company's impact assessment here.

© ELEXON Limited 2009

1 Background & Related Changes

What is a Power Park Module?

The term **Power Park Module** relates to generators who use an Intermittent Power Source. The Grid Code defines an Intermittent Power Source as being 'the primary source of power for a Generating Unit that cannot be considered as controllable (e.g. wind, wave or solar)'. A wind turbine is therefore one example of an intermittent Generating Unit.

The new regime for Offshore Transmission came into effect ('Go Active') on 24 June 2009, and is expected to 'Go Live' in June 2010. As part of Go Active, the Secretary of State made changes to the industry codes (including the Grid Code and the BSC) to support the intended Offshore arrangements.

As a result, the Grid Code now makes a distinction between Onshore Power Park Modules and Offshore Power Park Modules. The new Grid Code definitions are:

- **Onshore Power Park Module** – A collection of Onshore Generating Units (registered as a Power Park Module under the PC[1]) that are powered by an Intermittent Power Source, joined together by a System with a single electrical point of connection to the Onshore Transmission System (or User System if Embedded). The connection to the Onshore Transmission System (or User System if Embedded) may include a DC Converter.
- **Offshore Power Park Module** – A collection of one or more Offshore Power Park Strings (registered as a Power Park Module under the PC). There is no limit to the number of Power Park Strings within the Power Park Module, so long as they either:
  - Connect to the same busbar[2] which cannot be electrically split; or
  - Connect to a collection of directly electrically connected busbars of the same nominal voltage and are configured in accordance with the operating arrangements set out in the relevant Bilateral Agreement.

The BSC continues to refer generically to Power Park Modules. It cross-refers to the Grid Code's definition of this term, which now makes the distinction between Onshore and Offshore.

The Grid Code's definition of Offshore Power Park Module also introduces the following new term:

- **Offshore Power Park String** - a collection of Offshore Generating Units that are powered by an Intermittent Power Source, joined together by cables forming part of a User System with a single point of connection to an Offshore Transmission System. The connection to an Offshore Transmission System may include a DC Converter.

The new definition of an Offshore Power Park Module differs from that for Onshore, in that it requires these Offshore Power Park Strings to be connected to the same busbar or to a set of connected busbars.

Where can I find full technical definitions of these terms?

You can find the full BSC definitions of Power Park Module, Generating Unit and BM Unit in Annex X-1 and Section K3.

All Grid Code definitions are contained in the Grid Code Glossary and Definitions.

[1] Planning Code (part of the Grid Code).

[2] You can find an explanation of what a busbar is in Section 2 of this Attachment.

© ELEXON Limited 2009

What changes have been raised from Issue 37?

The P237 solution developed through the Issue 37 Group's discussions. The Panel raised Issue 37 to consider whether the current BSC requirements for BM Unit configurations and metering are suitably flexible to accommodate the changing designs for generation and, in particular, for new Offshore generation build.

The Issue Group recommended 4 changes to the BSC, which have all since been raised as Modification Proposals. Table 1 below summarises each issue and the Issue Group's proposed solution. It also gives the corresponding Modification Proposal numbers for reference.

Three of the Issue 37 changes impact Offshore generators. While there are individual benefits associated with each of these changes, the Issue Group considered that the combined benefits of all 3 together will be greater. If all the changes are approved, there will therefore be efficiency/certainty benefits in implementing them in parallel or as close together as possible (given that the P240 timetable is 2 months behind P237/P238).

Table 1 – Modification Proposals raised from Issue 37

Modification Proposal	Description of proposed change
P237 - Standard BM Unit configuration for Offshore Power Park Modules	Allows Parties the option of having a single BM Unit (or reduced number of BM Units), subject to the Transmission Company's agreement,[3] in order to reduce costs and administration.
P238 - Removal of the requirement to Meter each Boundary Point for Offshore Power Park Modules	Allows Parties to treat all Exports from (or Imports to) a BM Unit comprising Offshore Power Park Modules as a single Export (or Import). The Party must ensure appropriate compensation is applied to Meter readings to account for losses between the location of the metering and the ownership boundary[4].
P240 - Switching Plant and Apparatus between BM Units	Allows Parties to switch output between BM Units (without the need to re-register the BM Unit(s)) to resolve issues such as loss of connection or partial Plant failure.
P241 - Relaxation of requirement to separately Meter Licensable Generating Units	Removes the requirement to separately Meter the flows to each Generating Unit within a Combined Cycle Gas Turbine (CCGT) Module with a single Boundary Point[5]. Many sites only Meter the net output at the CCGT Module's single Boundary Point, so will be non-compliant with the existing BSC provisions.

[3] References to the 'Transmission Company' in this document mean the GB System Operator, and should not be confused with the Offshore Transmission Owners (OFTOs) which are being procured as part of the new Offshore regime. References to the 'Transmission System' mean the National Electricity Transmission System, which includes Offshore waters.

[4] The ownership boundary is the point at which responsibility for energy changes from one participant (e.g. a generator) to another (e.g. the OFTO).

[5] A Boundary Point is the point at which a generator's Plant/Apparatus is physically connected to a Distribution System or to the Transmission System.

© ELEXON Limited 2009

Example Offshore configurations

To illustrate the issue which P237 identifies, the Group has considered a number of example configurations for Offshore wind farms.

The Group has concluded that there are benefits from allowing 2 or more Offshore Power Park Modules to be a single BM Unit.

These are:

- Avoiding the **administrative overheads** of additional BM Units;
- Avoiding unnecessary **metering** and **data collection**; and
- Avoiding the need to change **Aggregation Rules** when the operational configuration of the wind farm is changed.

However, not all of these potential benefits apply to all Offshore wind farm configurations.

The benefits of P237 for a particular scheme will depend on the design of the Offshore platform and the location of the ownership boundary, as illustrated in the following worked examples.

For each worked example, the Group has estimated the potential cost savings to ELEXON/BSC Agents and the generator by using:

- The BSC's **CVA BM Unit Monthly Charge of £100** as a way of measuring the avoided central costs of registering/supporting unnecessary BM Units and their associated parameters; and
- A figure of **£11.5k** as a way of measuring the generator's avoided BM Unit set-up costs.

The Group's reasons for using these figures are explained in Section 4 of the main Assessment Report document. Please also refer to Section 4 of the main document for details of further (unquantified) ongoing operational savings to the generator and the Transmission Company, which these worked examples do not describe in detail.

The Group notes that the BSC requires each BM Unit to have only one Lead Party. A consequence of this is that 2 separate Offshore generators who are physically proximate (e.g. who share the same platform) will not be able to combine their Power Park Modules in a single BM Unit under P237, unless one of the generators is Exemptable and therefore able to nominate the other as its Lead Party under Section K of the BSC. The Group considers that this is appropriate in order to avoid difficulties for the Transmission Company in issuing instructions to the generators.

As with any renewable generation project, the Group notes that each Offshore intermittent generator will also need to take into account the interaction between the rules for Renewables Obligation Certificates and its chosen configuration of Plant/Apparatus. However, the Group does not believe that this presents any specific issues for P237.

What is a transformer?

A transformer is a device used to transfer energy from one circuit to another, which may be at different voltage levels.

© ELEXON Limited 2009

Principles applied when defining examples (added for the Draft Modification Report)

With the Transmission Company's support, ELEXON has updated the worked examples for the Draft Modification Report in order to give further clarity on how Offshore Power Park Modules are treated compared with Onshore Power Park Modules.

The examples use the ownership principles set out in **Section 2.12 of the Connection and Use of System Code (CUSC)**. In its 23 March 2009 document 'Government Response to Offshore Electricity Transmission – A further Joint Ofgem/DECC[6] Regulatory Policy Update', Ofgem/DECC make specific mention (on page 108) to the principles of CUSC 2.12 applying Offshore as well as Onshore.

CUSC 2.12.1(a) states that 'in relation to Plant and Apparatus located between the National Electricity Transmission System and a Power Station, the electrical boundary is at the busbar clamp on the busbar side of the busbar isolators on Generators and Power Station transformer circuits'.

- **Onshore**, the busbar is assumed to be at 132kV (Scotland) or 275kV and above (England & Wales), as this is the busbar to which the Power Park Module connects and this is the lowest voltage level in the Electricity Act's definition of High Voltage.
- **Offshore**, the Transmission Company's interpretation of CUSC 12.2 is that the busbar is assumed to be at 33kV – as this is the busbar to which the Transmission Company expects the Power Park Strings to connect (and to seek connection in the future).

For the Draft Modification Report, the Transmission Company has provided equivalent Onshore diagrams and interpretations for each of the Group's Offshore examples. While the diagrams are single line schematics and do not show the full range of electrical equipment, they indicate the equivalent location of the ownership boundary.

[6] The Department of Energy and Climate Change.

© ELEXON Limited 2009

Example 1 – 2 Power Park Modules with ownership boundary on Low Voltage side of platform and with 1 connection to shore

The following Offshore example shows a platform with 2 Offshore Power Park Modules (PPMs) and a single connection to shore. An equivalent Onshore PPM configuration is provided for comparison.

In the Offshore example, the ownership boundary is on the Low Voltage (LV) side of the transformers (the interlocking circles). Each of the 2 Offshore PPMs comprises 4 Offshore Power Park Strings of wind turbine generators (WTGs), shown to the right of the transformers. Under the existing BSC provisions, the standard BM Unit configuration is for each PPM to form a separate BM Unit. This example Offshore configuration will therefore be treated as 2 BM Units (unless the Party is granted a non-standard BM Unit configuration).

In the Onshore example, the ownership boundary is on the High Voltage (HV) side of the transformers. Under the Grid Code's definition, the Onshore configuration is treated as a single PPM and the P237 issue therefore does not arise.

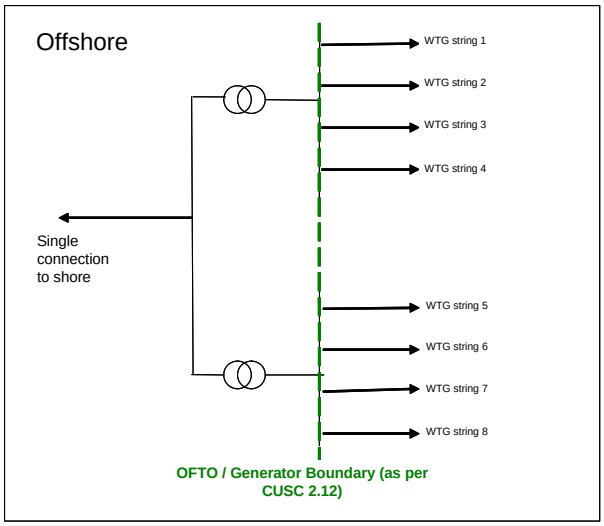

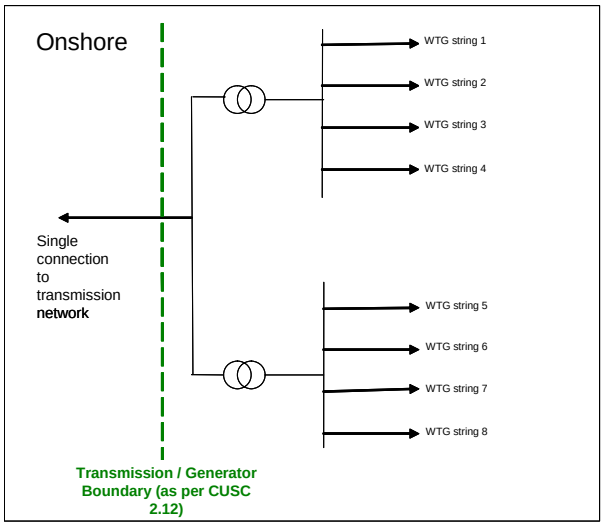

Benefits of P237 in isolation:

P237 will allow the 2 Offshore PPMs in this example to be a single BM Unit.

This will deliver administrative benefits to:

- *The generator (e.g. by reducing the number of required Physical Notifications);*
- *The Transmission Company (e.g. by avoiding the need to issue separate Bid Offer Acceptances to each Offshore PPM); and*
- *ELEXON/BSC Agents (by avoiding the need to register extra BM Units and associated parameters).*

The Group estimates that the avoided costs to ELEXON/BSC Agents will be £100 per month from the reduction in BM Units for this configuration (from 2 BM Units to 1). It estimates that the generator will save £11.5k in one-off BM Unit set-up costs.

Combined benefits with P238:

P237 on its own does not affect the metering requirements for this example Offshore configuration, as metering will still be required for each Boundary Point. However, if P238 is approved, P237 will allow a single Meter for the whole BM Unit (rather than separate metering of each Offshore PPM).

© ELEXON Limited 2009

For this example configuration, there are no additional benefits if P240 is approved because there is no ability for the generator to switch Plant/Apparatus through different circuits.

What is a busbar?

A busbar is an electrical conductor that makes a common connection between several circuits.

Example 2 – Capability to connect 2 busbars

This is similar to Example 1, but with an additional capability to join the 2 **busbars** together (e.g. in response to a fault in one of the transformers).

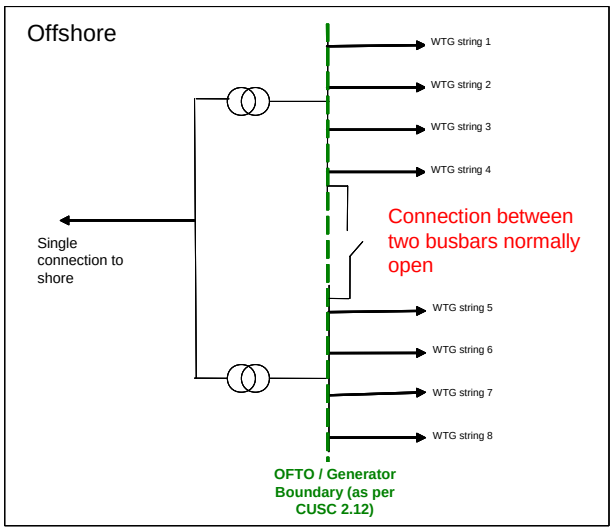

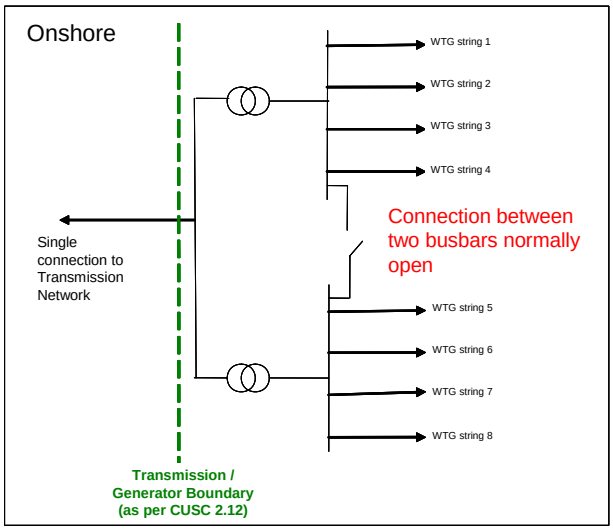

In the Offshore example, this will form 2 Offshore PPMs (and will continue to be treated as 2 Offshore PPMs under the Grid Code even when the switch is closed to join the 2 busbars). Onshore, this would still be treated as a single PPM so the P237 issue does not arise.

If P237 is not approved, and the standard BSC configuration remains that each Offshore PPM forms a separate BM Unit, the only way of correctly calculating the Metered Volumes for each BM Unit will be to install metering on the connection between the 2 Offshore PPMs.

Benefits of P237 in isolation:

P237 benefits this Offshore configuration in the same way as Example 1. It also has the additional benefit of removing the need for metering on the connection between the 2 busbars, reducing the number of Meters which the Offshore generator has to install from 3 to 2.

As for Example 1, the Group estimates that the avoided costs to ELEXON/BSC Agents from the reduction in BM Units for this configuration will be £100 per month. It estimates that the generator will save £11.5k in one-off BM Unit set-up costs.

Combined benefits with P238:

If P238 is also approved, this will further reduce the number of required Meters from 2 to 1.

For this example Offshore configuration, there are no additional benefits from P240 in combination with P237 (because P237 itself resolves the switching issue by allowing the generator to register all the Plant/Apparatus in a single BM Unit). If P237 is rejected, there are also no benefits from P240 on its own (as the only way to correctly calculate the Metered Volumes for each BM Unit will be to install metering on the connection between the 2 Offshore PPMs).

© ELEXON Limited 2009

Example 3 – Double busbar configuration with 1 connection to shore

In this Offshore example there are 2 double busbars (shown in blue) and a single connection to shore.

Each incoming or outgoing circuit connects to one or other side of the double busbar. Its purpose is to allow maintenance of one side or the other of the busbar while continuing to operate the associated connections, and to allow segregation of circuits to minimise the impact of any fault. This allows greater flexibility in which strings are routed through which transformer.

Note that this example is hypothetical. As far as the Group is aware, the only projects using this type of double busbar arrangement are those with 2 connections to shore. There is no Onshore equivalent of this hypothetical Offshore configuration, as the design is a function of the Offshore nature of the assets.

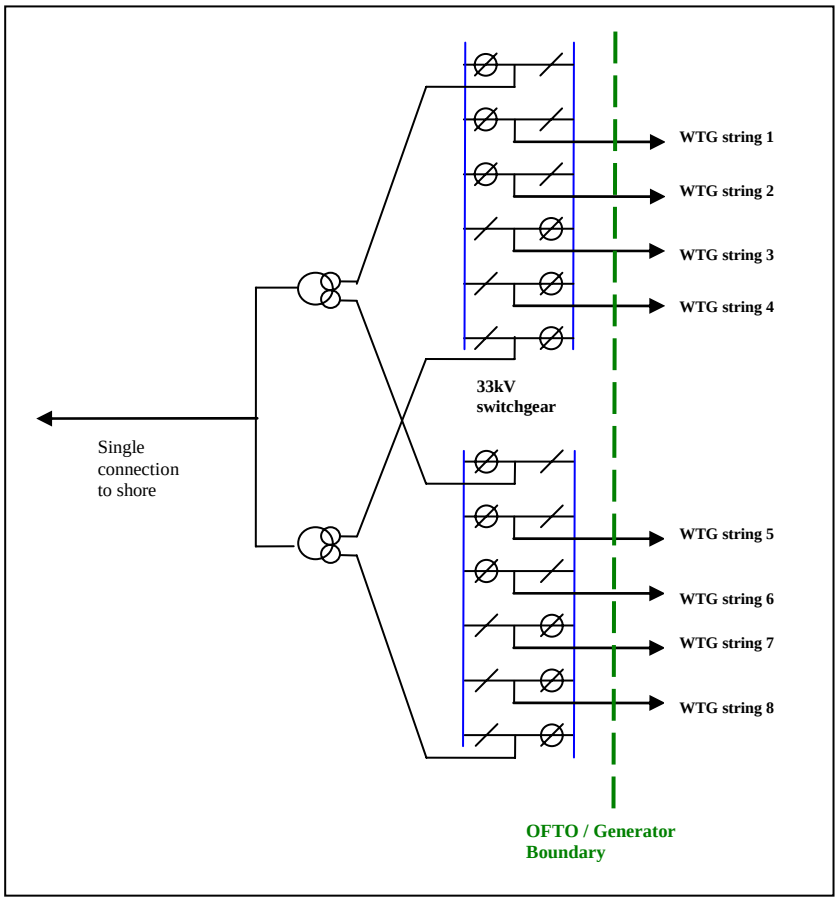

From discussion with National Grid, this hypothetical configuration would form 4 Offshore PPMs (1 per busbar). Under the existing BSC rules, the standard configuration is to treat each PPM as a separate BM Unit. However, the difficulty with this is that the 'Plant' associated with each Offshore PPM would change each time the switchgear is reconfigured.

Benefits of P237 in isolation:

P237 would allow the whole Offshore wind farm in this hypothetical example to be treated as a single BM Unit, without the generator needing to apply for a non-standard configuration. Treating the wind farm as a single BM Unit avoids the need for re-registration of BM Units and for changes to Aggregation Rules each time the configuration changes.

© ELEXON Limited 2009

The Group estimates that the avoided costs to ELEXON/BSC Agents will be £300 per month from the reduction in BM Units for this individual configuration (from 4 BM Units to 1). It estimates that the generator will save £34.5k in one-off BM Unit set-up costs.

Combined benefits with P238:

If P238 is also approved, this will reduce the number of Meters which the Offshore generator has to register.

For this hypothetical configuration, there are no additional benefits from P240 in combination with P237 (because P237 on its own resolves the switching issue by allowing the generator to register all the Plant/Apparatus in a single BM Unit). However, if P237 is rejected P240 will be needed to resolve the problem for this configuration of switching Plant/Apparatus between separate BM Units.

Example 4 - Double busbar configuration with 2 connections to shore

This is similar to Example 3, but with 2 connections to shore rather than 1. Again, there is no Onshore equivalent as the design is a function of the Offshore nature of the assets.

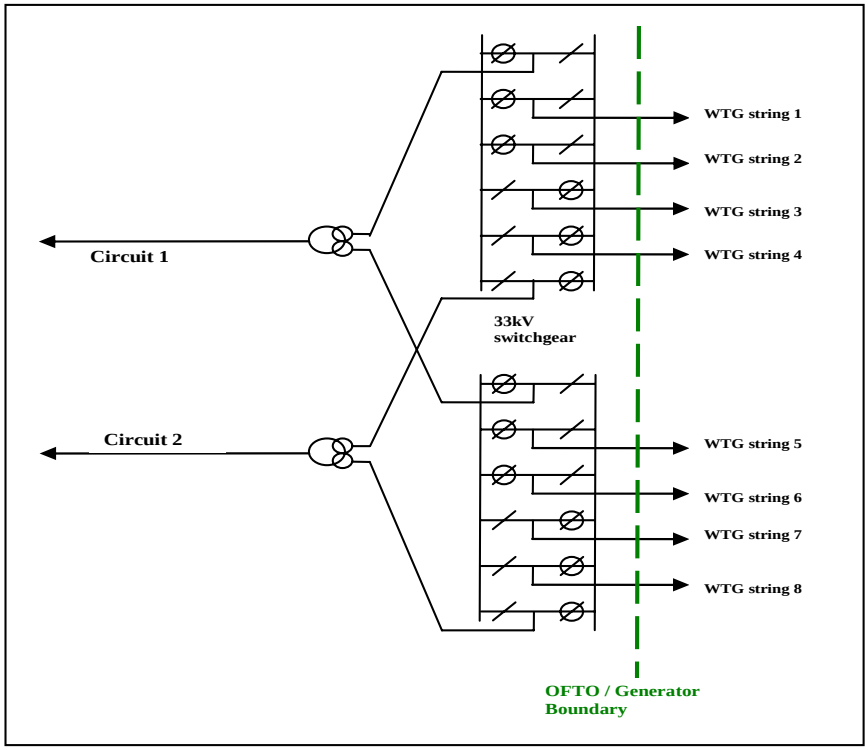

This type of configuration is extremely difficult to handle satisfactorily without a Modification Proposal to address the 'switching issue' (i.e. without P240).

However, its treatment under the existing BSC rules would seem to be as follows:

- By default, each of the 4 Offshore PPMs will form a BM Unit.
- The Transmission Company will need to be able to despatch the Plant on the 2 circuits to shore separately, so there is no possibility of applying for a non-standard configuration that treats the whole Offshore wind farm as a single BM Unit. At best, the site could be treated as 2 BM Units (1 for each connection to shore).
- The BSC does not allow strings of turbines to be switched from one transformer to another without going through a re-registration process (with a lead time of at least 30 Working Days).

© ELEXON Limited 2009

Benefits of P237 in isolation:

The benefits of P237 are therefore limited in this case. P237 will potentially allow the site to be treated as 2 BM Units (rather than 4) without the need to apply for a non-standard configuration.

If the site can be treated as 2 BM Units under P237, then the Group estimates that ELEXON/BSC Agents will avoid costs of £200 per month from this individual configuration. It estimates that the generator will save £23k in one-off BM Unit set-up costs.

Combined benefits with P240:

If P237 and P240 are implemented together, this will address the fundamental 'switching' problem between the Offshore PPMs.

Example 5 – Capability to connect 2 busbars and switch on OFTO assets

This is similar to Example 2 in that it contains 2 Offshore PPMs, which will continue to be treated as separate Offshore PPMs under the Grid Code even when the 2 Offshore busbars are joined together.

However, in this example the Offshore Transmission Owner (OFTO) assets can be switched on, such that energy from both Offshore PPMs is routed solely through one or other of the 2 Onshore busbars and circuits.

From discussion with National Grid, this Offshore configuration would be considered to represent 2 circuits to shore even though there is a single transmission circuit further up the line. The Transmission Company will need to be able to independently control each circuit to shore through the use of 2 separate BM Units (1 per Offshore PPM).

It is not known whether the equivalent Onshore example shown here is a valid Onshore configuration. However, if it is, the whole configuration would be treated as a single Onshore PPM and the P237 issue would not arise.

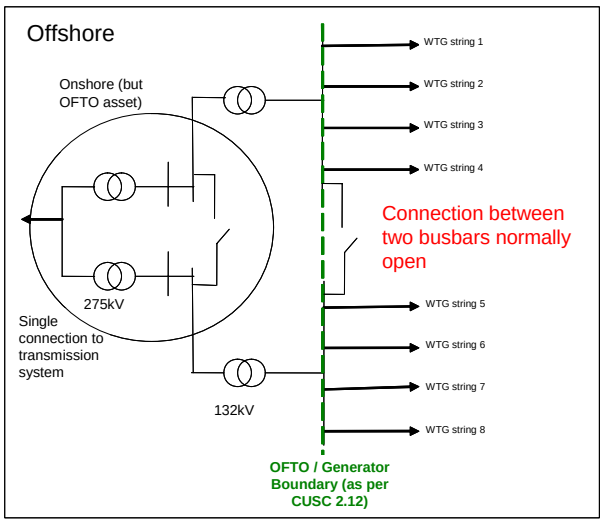

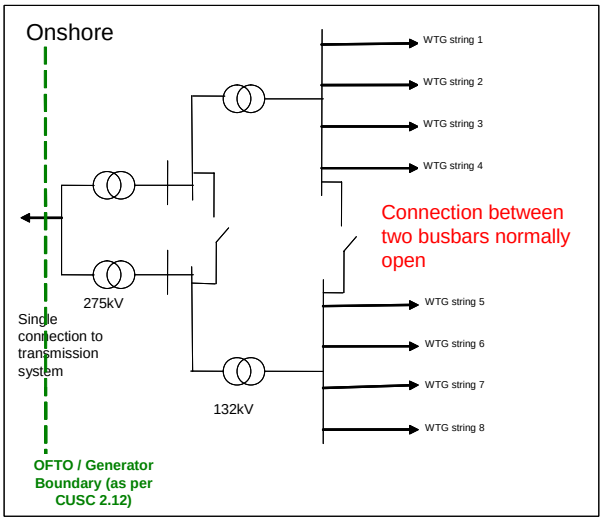

Benefits:

There are therefore no benefits from P237 in this specific case.

There are also no benefits from P238 (as each BM Unit must be metered separately) or P240 (as the only way to correctly calculate the Metered Volumes for each BM Unit will be to install metering on the connection between the 2 Offshore PPMs).

© ELEXON Limited 2009

Does the issue just affect Offshore generators?

The Issue 37 and P237 Groups have considered whether Onshore Power Park Modules:

- Currently encounter similar issues regarding BM Unit configurations; and/or
- Could encounter such issues in the future.

For Offshore generation, the boundary with the OFTO will be the ownership boundary. Onshore there is no OFTO, and the Power Park Module may be all the Plant up to the point of connection to the transmission system; there is no restriction on the Power Park Module under the Grid Code to being a single busbar or a group of connected busbars.

The Group has discussed the requirements for Onshore Power Park Modules, and cannot see any evidence that Onshore intermittent generators will be unduly disadvantaged by P237.

The Transmission Company and all consultation respondents agree with this view.

The Group notes that some Onshore intermittent generators have historically had similar configuration issues, which have been handled through the non-standard BM Unit application process.[7] These instances arose due to ownership boundaries that deviated from the principles contained within Section 2.12 of the CUSC. The Group does not expect there to be an issue in the future for Onshore generators under circumstances which are in line with Section 2.12 of the CUSC, and believes that the non-standard BM Unit application route remains appropriate for any Onshore exceptions. The Group therefore believes that P237 does not disadvantage Onshore renewables, but allows typical Onshore and Offshore circumstances to be treated equitably.

However, it should be noted that there is an ongoing debate within the Grid Code Review Panel (GCRP) regarding ownership of Gas Insulated Switchgear (GIS) assets. These discussions cover similar issues to the ones cited in the applications for non-standard BM Unit applications mentioned in Footnote 7, and it should be noted that 3 potential treatments are being considered: (1) ownership 'as now'; (2) ownership by the Transmission Company; and (3) user choice.

The Group is satisfied that it has given full consideration to the scope of the issue, and that its worked examples are sufficiently representative of the range of affected configurations which either currently exist or may exist in the future. The Group notes that the Transmission Company's own investigations support this view.

[7] Since NETA Go-Live in 2001, the Panel/ISG has received 5 applications from Onshore wind farms for non-standard BM Units, all of which have been granted. 4 of the 5 applications (from Blacklaw, Farr, Hadyard Hill and Beinn Tharsuinn wind farms) were made in 2005, before the term 'Power Park Module' (and its associated BM Unit category) was introduced in the BSC. Since the Power Park Module BM Unit category was introduced, there has been one further non-standard BM Unit application for an Onshore wind farm (Whitelee) in 2007. All of these wind farms are in Scotland. The Parties who own the wind farms have participated in the progression of P237/P238 by responding to the Group's consultation and/or providing expertise to the Group's membership.

© ELEXON Limited 2009

3 Assessment Consultation Responses

Table 2 summarises the views of the industry respondents to the Group's consultation, and of the Transmission Company (TC) in its impact assessment. You can download the full responses here.

Table 2 – P235 industry/Transmission Company responses

	Question	Industry	TC	Conclusion:	See:
1	The Group considers that the specific issue which P237 identifies is limited to Offshore generator configurations. It therefore believes that P237 creates no disadvantage for Onshore intermittent generators. *Do you agree?*	4 Yes 0 No	Yes	P237 will not disadvantage Onshore generators	Attachment A: Sections 1 & 2
2	The Group believes that P237 will better facilitate the achievement of Applicable BSC Objectives (b), (c) and (d) when compared with the existing BSC requirements. *Do you agree?*	4 Yes 0 No	Yes	Better facilitates	Main document: Section 6
3	Would P237 deliver efficiency/administrative benefits for your organisation? *The Group would also welcome any details of cost-savings which you might achieve from P237.*	4 Yes 0 No	Yes	P237 will remove inefficiencies for affected Offshore generators and the TC	Main document: Section 4
4	The Group believes that the combined benefits of P237 and P238 will be greater than those which arise individually from each proposal. Although P240 has yet to receive further assessment, the Group believes that it is likely that this will also have additional benefits in combination with P237/P238. *Do you agree?*	4 Yes 0 No	Yes	P237/P238/ P240 will deliver additional benefits if combined	Main document: Section 6 Attachment A: Section 2
5	The Group believes that the P237 changes to the BSC and BSCP15 should be implemented 5 Working Days after an Authority decision. It believes that ELEXON should raise a separate Change Proposal to introduce examples of Offshore Aggregation Rules to BSCP75 once the Authority has made its decisions on all of the current Modification Proposals which relate to Offshore requirements. *Do you agree?*	4 Yes 0 No	Yes	This approach is appropriate	Main document: Section 5
6	Do you believe that there are any alternative solutions to the issue which the Group has not identified, and which it should consider?	0 Yes 4 No	No	Chosen solution is appropriate	Main document: Section 3

What are consultation respondents' views?

Respondents unanimously support P237 and the Group's conclusions.

No new arguments have been raised, although some respondents have provided supporting details of the cost and/or efficiency savings to their organisations from P237.

© ELEXON Limited 2009

Who has participated in the Group's discussions?

The P237 Modification Group consists of members of the **Settlement Standing Modification Group** (SSMG) who have previously been part of the Issue 37 Group, supplemented with the Transmission Company's expertise on the Grid Code requirements for intermittent generators.

The same Group has considered P238 in parallel. Table 3 contains full details of the Group's membership.

Table 3 – P237/P238 Modification Group attendance

Member	Organisation	17/07/09	14/08/09
David Jones	ELEXON (Chair)	Y	Y
Kathryn Coffin	ELEXON (Lead Analyst)	Y	Y
Chris Stewart	Centrica (Proposer)	Y	Y
Ian Pashley	National Grid	Y	Y
Gary Henderson	SAIC	Y	Y
Esther Sutton	E.ON UK	Y	Y
Andy Colley	SSE	Y	Y
Fiona Irwin	Great Gabbard Offshore Winds Limited	Y	Y
Ed Marr	RWE Npower	Y	Y
Attendee	**Organisation**	**17/07/09**	**14/08/09**
John Lucas	ELEXON (Technical Support)	Y	Y
Natalie Pike	ELEXON (Lawyer)	Y	Y
Yvonne Naughton	Ofgem	Y	Phone

What areas did the Panel ask the Group to consider?

Table 4 summarises:

- The different areas which the Group has considered as part of its P237 Terms of Reference, as set by the Panel; and
- The Group's conclusion in each area.

For each area, the table also shows whether you can find further details of the Group's discussion within the main consultation document or in this Attachment A.

Who is the SSMG?

A standing group of industry experts, who the Panel has appointed to consider potential BSC changes in a number of subject areas – including BM Unit issues.

© ELEXON Limited 2009

Table 4 – P237 Assessment Procedure Terms of Reference

Area of Terms of Reference	Group's conclusion	See:
Does the identified issue only affect Offshore, and not Onshore, Power Park Modules?	Yes, the specific issue which P237 identifies occurs in normal Offshore circumstances but not under typical Onshore arrangements. Non-typical Onshore configurations can be dealt with appropriately under the existing non-standard BM Unit process, but a new standard BM Unit category is required Offshore. The solution will therefore not unduly disadvantage Onshore intermittent generators.	Main document: Section 1 Attachment A: Sections 1 & 2
What types of configuration for an Offshore intermittent generator are affected by the issue, and what are the specific benefits of P237 for each affected configuration type?	Some Offshore generators will not be impacted at all. Others will be impacted to different extents. The Group has provided worked examples of the effects of the issue and P237's benefits for different types of configuration.	Attachment A: Section 2
Should there be any further criteria for combining multiple Offshore Power Park Modules in a single BM Unit?	No, it is best to leave maximum flexibility for both the Transmission Company and Offshore generators to agree what is an appropriate configuration.	Main document: Section 3
If the Transmission Company does not agree to the registration, should the Lead Party be able to appeal this to the Panel?	There is nothing to prevent the Lead Party applying for a non-standard BM Unit configuration in these circumstances. This is an existing ability and not part of the P237 solution. It is therefore not an 'appeal' as such, but rather an alternative application route.	Main document: Section 3
Does P237 impact any BSC Agents?	No, the Group has confirmed that P237 does not require any changes to BSC Agent systems, processes or documents.	Main document: Section 4
What are the benefits of P237: • In isolation; and • Combined with other Issue 37 changes?	P237 will deliver additional benefits in combination with P238 and/or P240. See the Group's worked examples for details of these benefits.	Main document: Section 6 Attachment A: Section 2

© ELEXON Limited 2009

What process and timetable has the Group followed?

Table 5 shows the timing of the key assessment activities which the Group has undertaken, while Table 6 contains the costs of progressing P237 through the process.

Table 5 – P237 timetable (showing interaction with other Issue 37 changes)

Date	Assessment activity
28/04/09	ISG discusses issues with Offshore metering and BM Units
14/05/09	Panel raises Issue 37
03/06/09	Issue 37 Group holds its first meeting
23/06/09	Issue 37 Group holds its second and final meeting
26/06/09	Centrica raises P237 and P238
09/07/09	ELEXON presents the Issue 37 report to the Panel
09/07/09	ELEXON presents the P237 and P238 IWAs to the Panel / Panel submits P237 and P238 to the Assessment Procedure
17/07/09	Modification Group holds its first meeting for P237 and P238
21/07/09	RWE Npower raises P240 and P241
28/07/09	ELEXON issues the P237 and P238 Assessment Consultation documents for industry consultation, and for impact assessment by BSC Agents and the Transmission Company
11/08/09	Participants return Assessment Consultation responses / BSC Agents and the Transmission Company return impact assessments
13/08/09	ELEXON presents the P240 and P241 IWAs to the Panel
14/08/09	Modification Group holds its second meeting for P237 and P238
21/08/09	Modification Group holds its first meeting for P240 and P241
04/09/09	ELEXON submits the Group's P237 and P238 Assessment Reports to the Panel
10/09/09	ELEXON presents the Group's P237 and P238 Assessment Reports to the Panel

Table 6 – Estimated P237 progression costs up to an Authority decision

Meeting cost	External legal/ expert cost	BSC Agent impact assessment cost	ELEXON resource
£500[8]	£0	£7,000	46 man days, equating to c.£12.5k[9]

[8] This has reduced from the £750 estimate in the IWA, as only 2 rather than 3 meetings will be needed.

[9] This has reduced from the original IWA estimate of 57 man days (c.£15.5k), as there has been less Group discussion (and therefore less time spent drafting documents) than ELEXON originally envisaged.

© ELEXON Limited 2009