Stage 03: Assessment Consultation

What stage is this document in the process?

- 01 Initial Written Assessment
- 02 Definition Procedure
- 03 Assessment Procedure
- 04 Report Phase

P240: Switching Plant and Apparatus between BM Units

Currently the BSC does not allow Generating Plant to be moved from one BM Unit to another in operational timescales, except by re-registering the BM Units which takes 30 working days.

P240 proposes to allow Power Park Units to be moved between BM Units in operational timescales. The arrangements would apply in the case where Exports from and/or Imports to Plant and Apparatus may be electrically switched between transmission connections.

Modification Group recommends
Approval of modification P240 'Switching Plant and Apparatus between BM Units'

High Impact:
Intermittent generators

Medium Impact:
ELEXON and the Transmission Company

Low Impact:
Impact on the Central Registration Agent and Central Data Collection Agent

© ELEXON Limited 2009

Contents

1	Summary	3
2	Why Change?	4
3	Solution	5
4	Impacts & Costs	9
5	Implementation	12
6	The Case for Change	13
7	Further Information	16
Attachment **A**: Additional Information		16
Attachment **B**: Assessment Consultation Question Form		16
Attachment **C**: Legal Text Proposed		16

About this document:

The purpose of this Assessment Consultation is to obtain views or further evidence from BSC Parties and other interested parties on matters discussed in this document. The P240 Modification Group will then discuss the consultation responses before making its recommendations to the Panel on 12 November 2009.

There are 4 parts to this document. This is Part 1. Part 1 provides details of the solution, impacts, costs, benefits and the potential implementation activities associated with this change.

Part 2 (Attachment A) sets out the additional background information and detailed BSC Agent Impact Assessment.

Part 3 (Attachment B) is the Assessment Consultation Questions response form, which includes all the questions highlighted in Part 1 of the Assessment Consultation document.

Part 4 (Attachment C) is the proposed legal text.

Any questions?

Contact:
Bu-Ke Qian

bu-ke.qian@elexon.co.uk

020 7380 4146

© ELEXON Limited 2009

1 Summary

Why Change

Currently the BSC does not allow Generating Plant to be moved from one BM Unit to another in operational timescales, except by re-registering the BM Units which takes up to 30 Working Days.

The Issue

For offshore wind farms that have multiple connections to shore, there are a number of scenarios in which a Party may wish to switch the output of individual Wind Turbine Generators from one connection to another (e.g. in response to faults or maintenance). The rules governing BM Unit configurations in Section K of the BSC do not support this capability.

Solution

P240 proposes to amend Section K of the code to allow plant and apparatus that comprise Power Park Strings to be moved between BM Units in operational timescales. The arrangements would apply in the case where Exports from and/or Imports to Plant and Apparatus may be electrically switched between transmission connections.

Impacts & Costs

P240 will require changes to the BM Unit registration process, which is set out in Section K3 of the BSC to enable plant and apparatus to 'switch' between BM Units in operational timescales.

The Group has undertaken a BSC Agent impact assessment to establish the extent of any impact BSC Agents.

Related changes

P240 progresses one of the recommendations of the **Issue 37**[1] Group. This Group considered 4 issues with the BSC metering and BM Unit requirements, including two related Offshore generation issues that are being progressed as Modifications:

> **Modification Proposal P237**[2] would allow an Offshore intermittent generator to register two or more of its Power Park Modules as a single BM Unit; and
>
> **Modification Proposal P238**[3] would allow metering to be installed to determine the Exports (or Imports), provided that appropriate compensation is applied to meter readings to account for losses between the location of the metering and the commercial boundary.

Implementation Date

The Group agreed that, provided there are no system changes required, the implementation date should be 5 WDs after an Authority decision (in align with the implementation date of Mod P237/238).

The Group's initial view is that implementation of P240 would better facilitate Applicable BSC Objectives (b) and (c).

What is a Power Park Module?

This is the Grid Code term for a collection of Generating Units which are powered by an intermittent power source (e.g. by wind, wave or solar power).

[1] 'Boundary Point Metering and BM Unit Issues in Section K'
[2] 'Standard BM Unit configuration for Offshore Power Park Modules'
[3] 'Removal of the requirement to meter each Boundary Point for Offshore Power Park Modules'

© ELEXON Limited 2009

Recommendations

Modification Group recommends the Panel to approve modification P240 'Switching Plant and Apparatus between BM units'.

2 Why Change?

The Grid Code allows for Power Park Units (PPU i.e. generating unit) to be switched from **Power Park Module** (PPM) to PPM (Planning Code A.3.2.2 (k)). This is considered an operational change, with a simple operational notification to the GB System Operator of the number of Power Park Units (PPUs) of each different type on each PPM that is changed, immediately the change is made.

However the BSC, in Appendix K3.1.3, prohibits Plant and Apparatus from being comprised in more than one BM Unit. The change of a PPU from PPM to another PPM may be seen as changing Plant and Apparatus from one **BM Unit** to another.

Under the current arrangements, the BSC would not allow strings of turbines to be switched from one transformer to another without going through a **re-registration process** (with a lead time of at least 30 Working Days)

The time scale and the need for a re-registration process may pose a significant issue for certain offshore wind farms included in the new Offshore Transmission Regime where output can be electrically switched between transmission connections.

Re-registration process

The BM Unit re-registration process takes about 30 days, and may therefore not be a practical way to manage a short-notice operational reconfiguration (for example, in response to a fault). The BSC only allows Plant/Apparatus to be contained in one BM Unit at a time.

Background and related changes

On the 14 May 2009 we presented a paper to the BSC Panel on two issues relating to metering requirements for Combined Cycle Gas Turbine (CCGT) Modules and PPMs. One of the issues identified was the inability to switch assets between BM Units. The BSC Panel raised **Standing Issue 37** (Boundary Point Metering and BM Unit Issues in Section K). The Issue 37 Group met on the 3rd and 27th June 2009 and identified potential solutions to these issues.

The Group agreed that there are a number of scenarios in which wind farms with more than one connection to shore may wish to switch the output of certain Wind Turbine Generators from one connection to the other. This would typically occur when one of the offshore circuits cannot be used (due to faults or maintenance), and the generator therefore wishes to reconfigure the network to make full use of the remaining capacity.

The Group agreed that the BSC does not currently allow this type of operational reconfiguration and therefore agreed that the current BSC drafting will severely constrain the ability of Generators with more than one connection to shore to maximise their generation during conditions of network fault of maintenance.

© ELEXON Limited 2009

3 Solution

P240 proposes that the BSC should be amended to support the Grid Code provisions for switching of Power Park Units between Power Park Modules (and hence between BM Units). Where the Grid Code permits a Power Park Unit to move from one BM Unit to another, the BSC and its associated Settlement processes should not prevent this.

Although this issue was identified in relation to Offshore Power Park Modules, it potentially applies onshore as well. The proposed P240 solution therefore applies to **all Power Park Modules**. This is also consistent with the Grid Code provisions for submission of a **Power Park Module Availability Matrix** (which is designed to achieve certainty in knowing the number of Power Park Units Synchronised to meet the Physical Notification and to achieve a Bid-Offer Acceptance) to the Transmission Company.

Power Park Module Availability Matrix

You can find a Power Park Module Availability Matrix example form in Balancing Code BC1.A.1.8 of the Grid Code.

Notification of When Switching Takes Place

The Modification Group discussed whether a new process was required to inform BSC Agents and/or BSC Parties when a Power Park Unit is switched between BM Units, but concluded that no new processes are required.

No change is required to Settlement as a result of switching (except when Aggregation Rules change, which is discussed separately below), and for that reason there would be no benefit in a new requirement to notify BSC Agents of switching.

If a switching event changes the expected output of a BM Unit, this will be notified to Parties through the existing processes for reporting of Physical Notifications and Maximum Export Limits. The Modification Group concluded that this is sufficient, and therefore no additional notification from Parties is required.

Changes to Aggregation Rules

In many cases, depending on where metering is situated, the switching of Power Park Units between BM Units will not require any changes to Aggregation Rules. Example configurations 1 and 3 below provide illustrations of this.

What are Aggregation Rules?

Aggregation Rules are rules submitted by the Lead Party of a BM Unit that specify which meter registers should be aggregated to derive the Metered Volume for that BM Unit.

In other cases, switching may require changes to Aggregation Rules. Example configuration 2 would be an example of this (assuming that metering was installed at the boundary between Generator and Transmission Owner assets).

Where changes of Aggregation Rules are required, it is envisaged that a process similar to that described in Section R3.2.5 of the BSC (for Range CCGT Modules) would be used:

- When first registering the Aggregation Rules, the Lead Party would provide more than one set of Aggregation Rules, each reflecting a different operating configuration;
- Each set of Aggregation Rules would be validated in accordance with normal procedures;
- When the operating configuration of the site changed, the Lead Party would fax/email the CDCA with details of which pre-validated configuration was to be used, and the time at which it would come into effect. The CDCA would then update central systems (prior to Interim Information Volume Allocation Run) to use the stated Aggregation Rule.

© ELEXON Limited 2009

The BSC Agent impact assessment has identified a constraint in the CDCA software that prevents changes to Aggregation Rules from becoming effective at any time other than the start of a Settlement Day (i.e. midnight). Removing this constraint would require significant changes to the CDCA software, the cost of which has been assessed at £63k. The Modification Group do not believe that there is a clear case for making this investment, and the following solution is therefore proposed:

- Changes to Aggregation Rules notified to CDCA will be implemented at midnight following the time of the change;
- In the event that this system limitation has an impact on Trading Charges for the Lead Party (or a relevant Subsidiary Party), the Lead Party may request that ELEXON make an adjustment to metered data (in the period between the switching event and the start of the subsequent Settlement Day) to compensate for the incorrect Aggregation Rules. This might be necessary if (for example) one of the BM Units was subject to a Bid Offer Acceptance and the allocation of energy to the wrong BM Unit was exposing the Lead Party to Non-Delivery Charges; or if one of the BM Units was subject to a Metered Volume Reallocation Notification and the allocation of energy to the wrong BM Unit was therefore leading to Imbalance Charges;
- On receipt of the request, ELEXON would determine any adjustment to metered volumes required to correct the issue, and notify CDCA accordingly. Such an adjustment would not change the total amount of energy generated by the wind farm, but would potentially move energy from one BM Unit to another;
- CDCA would then implement the adjustment by manually changing the relevant meter readings;
- This new process will be described in BSCP03 ('Data Estimation and Substitution for Central Volume Allocation').

The Modification Group envisages that this process will be invoked infrequently. If it turns out to be used more frequently, it may be appropriate to reconsider whether to amend the CDCA software. The Group notes that ELEXON would have the power to propose such a change (in accordance with BSCP40).

© ELEXON Limited 2009

P240 Example Configuration

The following examples are taken from a paper (ISG99/08) presented to ISG and have also been used to facilitate the P237 discussions. The diagrams illustrate the P240 issue.

Example 1

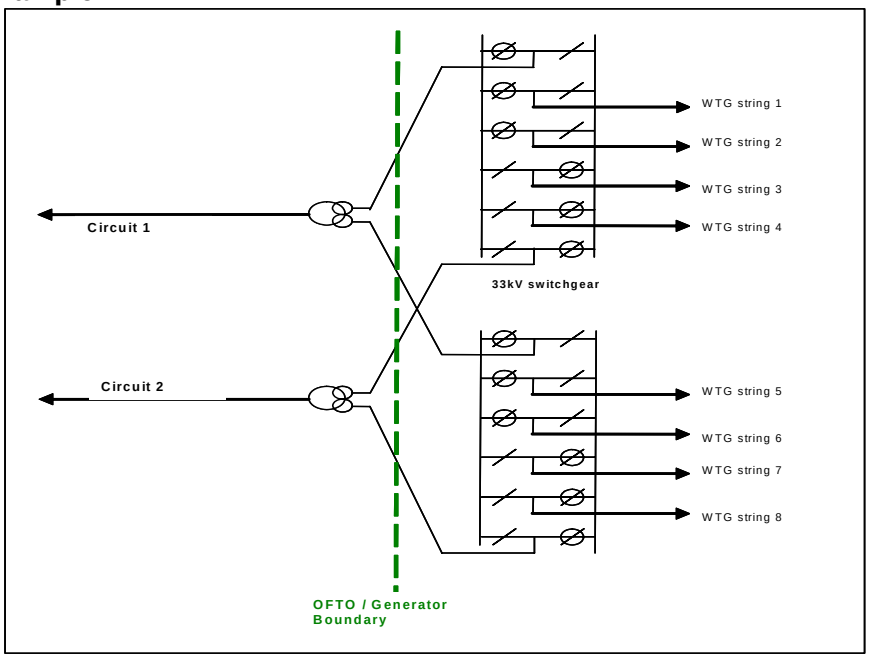

Example 1

- Four BM Units, each with two WTG strings (or potentially two BM Units with four turbines each if P237 approved);
- Switchgear can change which turbine strings are in which BM Unit

Example 2

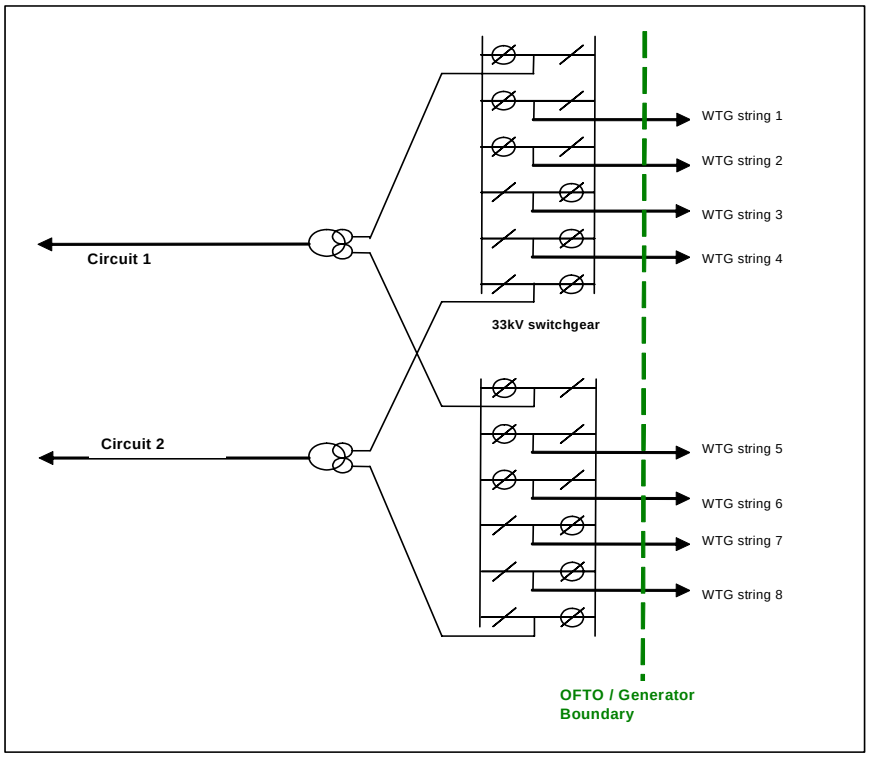

Example 2

- Same as example 1, but OFTO / Generator boundary is on individual strings
- Aggregation Rules would have to change when switches were changed

© ELEXON Limited 2009

Example 3

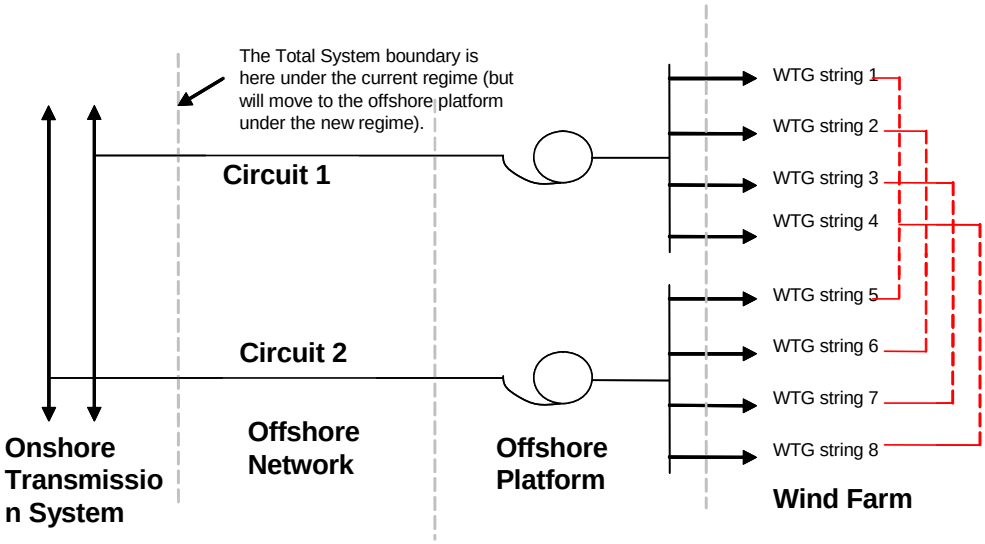

Example 3

- Connections between individual strings can be closed if there is a cable fault on one of the strings
- P240 would avoid the need to meter these transfers between strings

Has the Group identified any other solutions?

The Modification Group has not identified any alternative solution which it believes might better address the issue.

Consultation Question: Scope of issue
The Group believe switching should be restricted to Power Park Modules to remain consistent with the Grid Code. Do you agree?
The Group invites you to give your views using the response form in Attachment B.

Consultation Question: Alternative solution
Do you believe that there any alternative solutions to the issue which the Modification Group has not identified, and which it should consider?
The Group invites you to give your views using the response form in Attachment B.

© ELEXON Limited 2009

4 Impacts & Costs

The impact on Settlement processes of Power Park Units moving between BM Units depends to a large extent on whether the BM Unit Aggregation Rules are affected:

- If no changes to the Aggregation Rules are required, there will be minimal impact on Settlement processes. As explained in below, the view of the Modification Group is that no additional notification to Settlement will be required. For this type of BM Unit, P240 is essentially a 'documentation only' change that amends the BSC legal text to remove barriers to switching of Power Park Units between BM Units.
- Where a change of Aggregation Rules is required, additional processes will be required to support this. Example configuration 2 in section 3 illustrates a configuration that would fall into this category (assuming metering was placed on the ownership boundary).

BSC Impact

The fundamental issue that P240 seeks to address is that Section K3.1.3 of the BSC currently prevents the switching of plant and apparatus between BM Units in operational timescales. Changes to Section K will be required to remove this restriction. Therefore, we have revised the concept of Plant and Apparatus comprising a BM Unit, such that plant which is switchable between BM Units is only regarded as being 'comprised in' the BM Unit to which it is electrically switched.

Grid Code Impact

ELEXON does not anticipate that any changes will be required to the Grid Code. However, the Transmission Company will need to confirm this during consultation to inform the Modification Group's discussions and ensure that the P240 solution and legal text is consistent with the Grid Code requirements.

Generation Capacity Impact

Section K3.4 requires the Lead Party of a BM Unit to notify a Generation Capacity that represents its view "in good faith and as accurately as it reasonably can" of the maximum expected generation for a BSC Season.

If unexpected switching of Power Park Units between BM Units causes one of the BM Units to exceed its notified Generation Capacity, the existing provisions of K3.4.3 will require the Party to re-notify a higher value. The Modification Group believe that these existing provisions are adequate, and that no changes to the process are required (particularly as Generation Capacity data is no longer used for assessing Generator's Credit Cover requirements, following implementation of Modification P215 'Revised Credit Cover Methodology for Generating BM Units').

BSC Party Costs

The Lead Party for a BM Unit would be required to notify CDCA when the operating configuration of the site changed. The Lead Party would fax/email the CDCA with details of which pre-validated configuration needed to be used, and the time at which it would come into effect. The only impact would be for BSC Parties with BM Units that have additional Aggregation rules to update their internal processes for notifying CDCA.

© ELEXON Limited 2009

BSC Agent Costs

The BSC Agent has provided an impact assessment that sets out how a change in Aggregation rules arising from a switching event would impact the CDCA systems.

The Group used an assumption that no more than 10 switching events per year would be made and therefore the assessment included a manual solution as well as an automated solution to understand the difference in costs. The assumption of 10 events is based on the fact that there are very few configurations that could currently switch and that switching would occur for maintenance and occasional faults.

The BSC Agent provided the two options for supporting switching between multiple sets of Aggregation Rules:

Solutions that allow switching between multiple sets of Aggregation Rules		
Option	Description	Cost
1) Manual Solution for Switching of Aggregation Rules	P240 implementation with no system changes. Aggregation rules to change on a Settlement Day basis only (i.e. from Settlement Period 1 on the day after the switching event occurred)	**£1.3K**
2) Semi Manual Solution	Introducing functionality that would make use of the existing copy function within the CDCA system to simplify the process of switching to an alternative rule as all rules would be entered into the system and only need copying forwards upon notification to use an alternative rule.	**n.a.** [4]

The impact assessments also identified a constraint in the current system that requires Aggregation Rule changes to come into effect at midnight. Two options for addressing this were identified:

Solutions that allow Aggregation Rule changes to come into effect within day		
Option	Description	Cost
3) System Changes for Switching Within Day	Introducing Period boundary for Aggregation Rules processing into the CDCA System.	**£63K**
4) Manual Solution for Switching Within Day	Using meter reading estimation to correctly allocate energy between BM Units for Settlement Periods where the "incorrect" rule was present in the system. This would only be done where the incorrect allocation of energy resulted in a material impact on any BSC Party, and the process for doing so would be described in BSCP03 ('Data Estimation and Substitution for Central Volume Allocation').	**£2.7K**

BSC Agent Impact Assessment

More detailed impact assessment results can be found in Section 3 of Attachment A.

[4] In order to allow BSC Agent to store multiple rules on the CDCA system, a coding change on the Maintain Aggregation Rule Form would be required. The cost for this change will be substantive and could not be justified by the Group. No firm price was therefore provided.

© ELEXON Limited 2009

BSC Agent identified two mechanisms for switching between multiple sets of Aggregation Rules: a manual one (option 1) or an automated one (option 2). But as the BSC Agent Impact Assessment indicated that the cost of option 2 would be disproportionately high, the Modification Group chose option 1 over option 2.

The impact assessment also flagged up the second (unrelated) question of whether there should be a mechanism for making changes effective at times other than midnight. The options here are:

- Only allow changes at midnight (i.e. option 1 only), in which case there's the potential for material impact on Trading Charges (e.g. non-delivery charges). The Group felt that this would be inappropriate, as Parties could (on rare occasions) be exposed to spurious charges through no fault of their own.
- An automated solution for making changes effective at times other than midnight (i.e. option 1 + option 3). The Group felt that this would also be inappropriate, as the situation the solution is trying to address is too rare to justify an expensive automated solution.
- A manual solution for making changes effective at times other than midnight (i.e. option 1 + option 4). This is relatively inexpensive, but avoids the risk of exposing Parties to spurious charges, and is therefore the preferred solution.

Potential Benefits

For offshore wind farms, the inability to 'switch' under the current arrangement could cause significant loss of revenue due to being restricted from re-directing its output. The Modification Group quantified the benefits for P240 as follows. In the circumstance where a fault prevents the output from a number of the turbines on a Power Park Module and this fault took 30 Working Days to fix, the following loss in revenue could occur.

Assume the combined output is 150MW and the load factor (average output of energy) is 40% at a price of £50 per MWh the loss would be:

£50/MWhour * 150MW *40% *24 hours/day * 42[5] days/month = **£3 million / month**

Switching output ensures that the appropriate Renewable Obligation benefits can be available to the generator (and purchaser of ROCs) for the available volumes.

[5] Currently, it takes 30 WDs to re-register a BM Unit and the turbines turn every day, so the outage would be 42 actual days.

© ELEXON Limited 2009

5 Implementation

The Group's preliminary view is that the Implementation Date of P240 should be **5 Working Days** after Approval is received from the Authority. This approach assumes the consultation responses do not indicate that central system changes should be progressed.

Recommendation

Modification Group recommends approval of the P240

Question : Implementation Date
Do you support the implementation date to be 5 WD after the Authority's decision?
The Group invites you to give your views using the response form in Attachment B.

© ELEXON Limited 2009

Group's discussions

The Group notes that the Grid Code allows for plant to be switched if it forms part of a Power Park Module. The BSC rules currently conflict with these provisions. There is no clear reason why the Settlement rules should prevent switching for Power Park Modules, particularly as the operational requirements allow for switching to occur.

This is a clear benefit to both the System Operator (SO) and the BSC Party in having its generated output made available to the system. Preventing switching could deprive the SO of volumes that could assist in managing the system. Additionally the Party can ensure the maximum available output can be delivered allowing it to meet any contractual obligations. Loss of output from a Power Park Module will impact the amount of energy that would be delivered from renewable sources, thus impacting broader energy efficiency targets.

In relation to the circumstance where a change in Aggregation rules would be required the Group noted that the Code already allows for multiple aggregation rules to be held for Range CCGT Modules (Section R 3.2.5).

However the Central Registration Agent (CDCA) has never been asked to apply multiple aggregation rules for a CCGT unit. The systems cannot currently automatically process changes to the Aggregation Rules for a BM Unit.

The Group discussed whether the switching activity should be restricted to **Lead Party** and concluded that since the Lead Party takes responsibility to inform changes to the BM Units, P240 should only apply to BM Units of the same Lead Party (i.e. you cannot switch generating units between two Parties).

What is Lead Party?

Lead Party is the Party registered or to be registered in respect of the BM Unit.

Consultation Question: Scope of the solution
The Group believe P240 should only apply to BM Units of the same Lead Party. Do you agree with this conclusion?
The Group invites you to give your views using the response form in Attachment B.

Consultation Question: multiple aggregation rules
Are you aware of any Power Park Module configuration that would require multiple aggregation rules to be held by the CDCA?
The Group invites you to give your views using the response form in Attachment B.

© ELEXON Limited 2009

Group's initial views of P240 benefits

The Group believes that P240 will better facilitate the achievement of **Applicable BSC Objectives (b) and (c)**. Further details are given in the table below.

Group's view of benefits of P241 against the Applicable BSC Objectives	
Description of Objective	Identified benefit
a) Efficient discharge of the obligations of the Transmission Licence.	None identified.
b) Efficient, economic and co-ordinated operation of the GB transmission system.	By allowing the assets to be switched between BM units for operational reasons, P240 will promote the efficient, economic and co-ordinated operation of the national electricity transmission system. Availability to System Operator of volume that would otherwise be unavailable to help balancing due to inability to switch.
c) Promoting effective competition in the generation and supply of electricity and in the sale and purchase of electricity.	P240 would remove issues related to the re-registration process (in order to allow Generating Plant to be switched between BM units) for some new Offshore Transmission Regime where output can be electrically switched between transmission connections (as this will comprise most new build of PPM). Parties can sell their output through switching volumes, and not incur loss of revenue.
d) Promoting efficiency in the implementation and administration of the balancing and settlement arrangements.	None identified.

Consultation Question: Applicable BSC Objectives
Would the Proposed Modification P240 help to achieve the Applicable BSC Objectives?
The Group invites you to give your views using the response form in Attachment B.

Group's initial views regarding benefits of P240 when combined with P237/P238

The P240 Modification Group has also assessed two other proposals relating to the configuration of BM Units for Offshore Power Park Modules (P237) and the requirements for Metering for Offshore Power Park Modules (P238). The Assessment and Report consultations for these Modifications have been issued and responses from industry indicate that when the ability to switch can be more effective if it is combined with the less onerous requirements for registering BM Unit configurations and Metering. The Group remains convinced therefore that, whilst P240 is an appropriate change in isolation it can deliver wider benefits when combined with P237/238. The discussion and examples of where the combined benefits can occur are detailed here:
P237 Assessment Report (page 14)

© ELEXON Limited 2009

P238 Assessment report (page 11 to 12)

Consultation Question: Combined benefits of P240 with P237/238
Do you agree that P240 provides additional benefit when combined with P237/P238?
The Group invites you to give your views using the response form in Attachment B.

© ELEXON Limited 2009

7 Further Information

More information is available in

Attachment A: Additional Information

This information includes:

- Background
- Terms of Reference
- Detailed BSC Agent Assessment
- Modification Group membership

Attachment B: Assessment Consultation Question Form

To help us process your response, please respond by **5pm on 13 October 2009** (the Modification Group may not be able to consider late responses)

Attachment C: Legal Text Proposed

A complete version of the consultation and impact assessment responses received are available on the P240 page of the ELEXON website.

© ELEXON Limited 2009