ELEXON

**Stage 03**: Attachment A: Detailed Assessment for P245

What stage is this document in the process?

01 Initial Written Assessment

02 Definition Procedure

03 Assessment Procedure

04 Report Phase

# P245: Changes to Long Term Vacant Site Timescales

## Contents


| | | |
|---|---|---|
| **1** | Terms of Reference | 2 |
| **2** | Group Discussions | 3 |
| **3** | Summary of Assessment Consultation Responses | 9 |
| **4** | Long Term Vacant Materiality Analysis | 12 |
| **5** | Related Changes | 14 |
| **6** | Timetable and Responsibilities | 15 |


## About This Document:

This is Attachment A of the P245 Assessment Report.

This attachment provides additional details of the Modification Group's discussions, a summary of the impacts and consultation responses, and the process which the Group has followed in assessing P245.



© ELEXON Limited 2010

# 1 Terms of Reference

The P245 Modification Group consists of members of the Settlement Standing Modification Group (SSMG), assisted by members of the P196 Review Group.

The table below summarises the:

- Areas which the Group has considered as part of its P245 Terms of Reference, as set by the Panel and shown in Table 1 below; and
- The Group's conclusions in each area.

**Table 1 – Terms of Reference**

| P245 Terms of Reference | | |
|---|---|---|
| Ref | Area | Group's conclusion |
| 1 | Determine whether the proposed timescale changes are appropriate. | The changes are appropriate, as they add clarity and ensure all LTV sites with 3 monthly read cycles can be picked up by the process. |
| 2 | Assess whether using calendar days (rather than Working Days, for example) is the best way of the stating the timescale requirement. | 'Calendar days' is best, as this is clearer than Working Days. |
| 3 | Consider whether other related LTV site timescales which are currently expressed in months should also be expressed in calendar days? | All LTV timescales should be expressed in calendar days for consistency and clarity.<br>The changes to these additional timescales form part of the Alternative Modification. |
| 4 | Consider whether the BSC is the appropriate place for the timescale requirements to sit. Would it be more appropriate for the requirements to be placed in a BSCP? | All LTV timescales would sit better in BSCP504, as they are a level of operational detail which does not need to be in the BSC.<br>This forms part of the Alternative Modification. |
| 5 | Consider the effect of P245 on Applicable BSC Objective (c) and any other relevant BSC Objective(s). | Both P245 Proposed Modification and P245 Alternative Modification would better facilitate Applicable BSC Objectives (c) and (d) by increasing the clarity, transparency and simplicity of the LTV process for Suppliers and NHHDCs.<br>The Group believes the Alternative Modification is best overall, as it delivers additional clarity and consistency. |

**Any questions?**

Contact:
**Andrew Wright**

**andrew.wright@elexon.co.uk**

**020 7380 4217**



© ELEXON Limited 2010

| P245 Terms of Reference | | |
|---|---|---|
| Ref | Area | Group's conclusion |
| 6 | Consider whether an Alternative Modification is required. | Group has developed an Alternative Modification which:<br>• Includes the changes set out in the Proposed Modification;<br>• Moves the details of LTV timescales from the BSC to BSCP504;<br>• Expresses all LTV process timescales in 'calendar days'; and<br>• Tidies up the wording of Annex S-2 paragraph 4.3 to remove any potential ambiguity. |
| 7 | Identify the most effective implementation approach for P245. | Implementation should be as early as possible.<br>29 March 2010 is the earliest feasible Implementation Date. |

Section 2 provides further details of the Group's discussions.

**Why did the P196 Modification Group choose the current LTV timescales?**

The P196 Group believed that including sites with read cycles which are less than 3 months was inappropriate, as some sites which are only temporarily unoccupied could end up being classed as LTV.

It also believed that allowing sites with annual read cycles to be included could risk holiday homes being inappropriately classed as LTV, because such sites are likely to be unoccupied at the same time each year.

The P196 Group therefore concluded that only sites with read cycles of 3-6 months should be included.

# 2 Group Discussions

## Group's views on the proposed timescale changes

The Group noted that, before a NHH site can be treated as LTV, the BSC and BSCP504 require the Supplier to have received at least two D0004 flows indicating that the site is not occupied.

**These flows must currently be received "at least 3 months and no more than 7 months" apart.**

The Proposer's representative explained why they were proposing to reduce the lower end of this timescale from 3 to 2½ months. The P196 Modification Group chose the original timescales so that Suppliers with 3 monthly (quarterly) and 6 monthly read cycles could use the LTV process without changing their Meter read cycles. The greatest period allowed between reads was 7 months, as opposed to 6 months. This was to cater for 'walk orders' (the window during which a Meter reading is taken – for example, two weeks either side of the Meter reading date) on a 6 month read cycle where readings were actually taken slightly more than 6 months apart.

However, the same rationale was not applied to quarterly read cycles where there is a 2½ month interval between Meter reads. This means that some legitimately LTV sites are not classified as LTV because they are read outside the LTV timescales. P245 proposes to shorten this timescale so that sites with quarterly read cycles which are read at 2½ months do not miss out on being classified as LTV. The Proposer's representative also noted that if a Supplier wants to include such a site in the current LTV process they have to request an additional site visit, which is inefficient. Without this extra visit, the site will continue to receive a non-zero EAC in Settlement which does not reflect its true (zero) consumption.


© ELEXON Limited 2010

**The Group unanimously agreed that it was sensible to alter the timescales in line with the P245 Proposed Modification. The Group noted that this would ensure that all sites which are genuinely LTV and have a 3 monthly read cycle can be captured in the LTV process, in line with the P196 Group's original intention.**

One member commented that it would be useful to understand how many sites currently miss out on being classified as LTV due to this issue, and would be included in the new timescales. Another member noted they had conducted analysis over a year ago that suggested around 10% of LTV sites were initially missing out on being LTV (and required an additional site visit to be confirmed as LTV), because they were read quarterly but were outside the 3 month timescale. The Group agreed it would be useful to investigate the materiality of the issue. See Section 4 for the materiality analysis.

## Is 'calendar days' the best way of stating the timescale requirement?

The Group considered the various ways of expressing timescales. Aside from months there are:

- Calendar days; or
- Working Days/Business Days.

ELEXON noted that the BSC defines a Business Day/Working Day as:

> "a day (other than a Saturday or a Sunday) on which banks are open in London for general interbank business in Sterling and, in relation to payment in euro, any such day when in addition the Trans European Automated Real-time Gross Settlement Express Transfer System is operating"

One member commented that he preferred calendar days as they were the simplest to count. Using calendar days would make it easier for participants to use the LTV process. With Business/Working Days, participants would have to determine which calendar day the Working Day deadline fell on in a particular month (taking account of weekends and Bank Holidays). This was needless complexity in what should be a simple process.

Another member noted some NHHDCs do not work to calendar days, although he appreciated the inherent simplicity of calendar days.

**The Group concluded that Business Days would add needless complexity, and unanimously agreed that the most sensible way of stating the LTV timescale requirements was 'calendar days'.**

## Are there other timescale requirements that should be expressed in 'calendar days'?

The Group noted that there were other LTV process timescales which are:

- Currently detailed in the BSC and BSCP504;
- Not included in the P245 Proposed Modification; and
- Currently expressed in "months".

The position of these requirements is set out in Table 2.


© ELEXON Limited 2010

**Table 2 – Position of LTV timescales in BSC and BSCP504**

| Position of LTV timescales in BSC and BSCP504 | |
|---|---|
| Document | Paragraph |
| BSC Section S | 2.8.3(a), 2.8.5(a) |
| BSC Section S Annex S-2 | 4.3.20(ii) |
| BSCP504 | 3.3.13.9, 4.15.1(3), 4.15.2(2a), 4.15.3(1), 4.15.3(4), 4.15.4(1), 4.15.4(2) |

These requirements can be summarised as:

1. Confirmation that a site is still LTV:
    - Once a site is classified as LTV, the NHHDC must make repeat visits to the site every 7 months in order obtain a Meter reading (and must send another D0004 if the site is still unoccupied);
2. Circumstances in which a site can no longer be treated as LTV:
    - If the Supplier has not received a flow from the NHHDC with J0024 'Site Visit Check Code' set to code 02 'Site not Occupied' within 7 months of the site being classified as LTV then the site can no longer be treated as LTV. (The process then starts again, with the Supplier having to receive two D0004s "no less than 3 months and no more than 7 months" apart before the site can be reclassified as LTV);
    - If the Supplier has not made proactive attempts to contact the owner/occupier within 7 months of the site being classified as LTV then the site can no longer be treated as LTV, and the process starts again; and
3. The Supplier can use the date that a customer closes its account as the start date of the LTV period (and zero EAC), provided a Meter reading is obtained for the last day of consumption and the date of this reading is no greater than 7 months after the Supplier receives the first D0004.

**The Group unanimously agreed that all LTV process timescales in the BSC and BSCP504 should be expressed using calendar days for consistency and clarity.** The Group noted that the P196 Group had originally set all of the above timescales to "7 months" to match the maximum length of time in which the Supplier must receive two D0004s.

The Group noted that these additional changes would need an Alternative Modification, as the Proposed Modification (as set out in the original Modification Proposal) is tightly defined. The Group agreed to develop an Alternative which included this requirement.


© ELEXON Limited 2010

## Clarifying Annex S-2 paragraph 4.3.20

**While discussing the other timescales, the Group identified that the wording of Annex S-2 paragraph 4.3.20 could be ambiguous and should be clarified.**

The start date of a site being LTV (and its associated zero EAC) is usually the date of the first D0004 with Site Visit Check Code 02. However, there is one exception to this rule. Where a customer had closed its account shortly before the first D0004 with Site Visit Check Code 02, the Supplier can use the date that a customer had closed its account as the start date for the LTV period. This is provided that the Supplier has a Meter reading for the account closure date, and that this date is no longer than 7 months before the first D0004. This requirement is in Annex S-2 paragraph 4.3.20.

This provision was originally agreed by the P196 Group to reflect that, in these circumstances, the likelihood was that the site had been vacant (and had zero consumption) from when the last registered customer had moved out.

However, the Group noted that the current wording is ambiguous and that the requirement could be stated more clearly. The requirement currently reads as follows:

*"4.3.20 For the purposes of paragraph 4.3.19, the Effective From Settlement Date for the use of an Estimated Annual Consumption ($EAC_{KR}$) of zero value* ***shall be the earlier of****:*

*(a) the date of the first visit referred to in Section S2.8.3 (a) in respect of which the appropriate notification referred to in Section S2.8.3(b) was given to the Supplier that no access to the metered Metering System "K" had been obtained by the relevant Non Half Hourly Data Collector* [i.e. the date of the first D0004]*; or*

*( b) if the Supplier receives notification from an owner and/or occupier of a property on which the metered Metering System "K" is situated that electricity is or will no longer be consumed on the property, the date of the notification or the date from which electricity will no longer be consumed (****whichever is the later****), provided that:*

*(i) Metered Data (as described in BSCP504) is also received at the date or effective date of such notification;*

*(ii) the date of this receipt is within seven months prior to the date of the first visit specified in paragraph (a) and the Supplier has received the notification referred to in Section S2.8.3(b) in relation to such visit* [i.e. within 7 months of the first D0004]*; and*

*(iii) Section S2.8.2 does not apply and the Supplier has complied with any relevant requirement in BSCP504 relating to the treatment or entitlement to treat the metered Metering System K as Long Term Vacant."*

As strictly drafted, this requires the Supplier to use either the last date of consumption on the site or the date that the owner/occupier notifies the Supplier that it is (or will be) no longer consuming electricity on the site (which may in practice be a different day to the last day of consumption). Under the current wording of Annex S-2 4.3.20 the Supplier must use whichever of these two dates is the latter as the start date for the zero EAC, and must have received Metered Data (i.e. a Meter reading) for either the last day of consumption or the date of the notification.


© ELEXON Limited 2010

The Group believed that this was confusing, and did not reflect the P196 Group's original intention, or how the process works in practice. The Group believed that the date on which the owner/occupier actually contacted the Supplier was largely irrelevant, as the

Supplier would always require the owner/occupier to provide a Meter reading for their last day of consumption before agreeing to close their account. The zero EAC should then apply from this last point of consumption (providing the date of the Meter reading was no more than 7 months after the first D0004), and not the date of notification. Otherwise, requiring the Supplier to use a notification date which is later than the last consumption date would prolong the period in which a non-zero EAC was used, and would not reflect the true (zero) consumption for the period between the last consumption date and the notification date.

**Why is it correct to start the zero EAC from the last consumption day?**

While not immediately intuitive, it is correct to start the zero EAC from the last date of consumption and not the first day of actual zero consumption. This is because the Annualised Advance (AA) associated with the final Meter reading will always be set to end at midnight on the day before the final Meter reading.

The current wording could also strictly allow the Supplier to start the zero EAC before the last day of consumption. This would occur if:

- The date that the owner/occupier notifies the Supplier that it will no longer be consuming electricity falls before the actual last day of consumption; and
- The owner/occupier provides a Meter reading on this notification date but not for the last consumption date.

Again, the Group agreed that this was manifestly not the P196 Group's intention. It also noted that this situation could not arise in practice, as a Supplier would never agree to close a customer's account before the last day of consumption.

The Group noted that the wording of BSCP504 Section 4.15.2 is clearer in this respect, and more closely reflects the P196 Group's intention, as it refers to using "the date that the customer closed its account" as the start date for the LTV period.

The Group therefore unanimously agreed that Annex S-2 paragraph 4.3.20 should be clarified. The Group noted that this additional change would need to be an Alternative Modification and agreed to include this requirement in an Alternative. The Group believed that making this change would add clarity, and would have no impact on Suppliers as it aligned to current working practice. Suppliers currently use the last date of consumption as the start of the LTV period, providing there is a Meter reading for that date, and the date is no more than 7 months before the first D0004.

## Is the BSC the appropriate place for these requirements?

The Group noted that the LTV process timescales are currently detailed in both the BSC and BSCP504, giving an element of duplication. The Group discussed whether it was necessary for the timescales to be in the BSC, or whether these were a level of operational details which would better sit solely in BSCP504. The Group noted that the BSC could only be amended through a Modification Proposal, whereas amendments to the BSCP could be progressed through a Change Proposal (CP).

The Group noted that there had been a concern from some Parties and Panel Members during the assessment of P196 that introducing the new LTV process could disincentivise Suppliers from obtaining actual Meter readings. The Ofgem Representative at the Panel meeting at which P196 was discussed had also indicated a preference for all LTV obligations to be in the BSC for transparency, as any breach of these obligations would be a breach of a Supplier's licence. However, ELEXON advised that there was nothing to the P196 reports to say specifically why the LTV timescales had been placed in the BSC.


© ELEXON Limited 2010

The Group noted the LTV process was now fully bedded in, and there was no indication that Parties were abusing the process.

The Group commented that the detail of timescale requirements were something that would be more appropriate for a Code Subsidiary Document (CSD) as they provide detail about the 'how' of a BSC process rather than the 'what' (which sits in the BSC). The Group also noted that there was considerable repetition between the BSC and BSCP504. This was inefficient.

The Group believed the obligation for there to be a set timescale should remain in the BSC; however it would be consistent with other BSC procedures to include the detail of a BSC obligation (i.e. what that timescale is) in BSCP504.

The Group also believed that the Modifications Process was overly time-consuming and expensive for changing a relatively minor feature of the LTV requirements and that the CP process would be more appropriate. ELEXON questioned whether there would be any increased risk by removing the LTV timescale details from the BSC. The Group were confident that placing the timescale requirements in BSCP504 would not increase the risk of the process as:

- Any subsequent changes would require a CP. This would involve industry consultation and the Supplier Volume Allocation Group (SVG) would need to make a unanimous decision. In the event SVG were split then the decision would be escalated to the Panel;
- Although there is no Ofgem decision or Competition Commission appeal process (as with Modifications to the BSC), Ofgem sits on the SVG and Parties could always raise counter CPs if they disagreed with the SVG's decision;
- The process would still fall under the BSC Audit;
- It would be more transparent for Parties to find all operational LTV details in one place – BSCP504. Having them in two places can cause confusion if the two documents word the requirements slightly differently; and
- There is no difference between a breach of the BSC or a breach of a BSCP, as BSCPs are legally part of the BSC. A breach of either would therefore be a breach of a Supplier's licence.

**On that basis, the Group unanimously agreed to move the detail of the LTV timescale requirements from the BSC to BSCP504.**

The Group noted that this additional change would need to be an Alternative Modification and agreed to include this requirement in the P245 Alternative.

The Group agreed that ELEXON should draft the changes to BSCP504 during the Assessment Procedure, in order to reduce the time required to implement P245 if it is approved. You can find the redlined BSCP504 changes in Attachment D for the Proposed Modification and Attachment E for the Alternative Modification. ELEXON will consult on the changes to BSCP504 during the Report Phase, along with the draft legal text.



© ELEXON Limited 2010

# 3 Summary of Assessment Consultation Responses

### "Would the Proposed Modification P245 help to achieve the Applicable BSC Objectives compared to the current arrangements?"

Respondents unanimously believed that the Proposed Modification would be better than the current arrangements. Respondents cited either Applicable BSC Objectives (c) and (d), or only Applicable BSC Objective (d). The views given matched those of the Group as detailed in Section 7 of the main Assessment Report.

### "Would the Alternative Modification P245 help to achieve the Applicable BSC Objectives compared to the current arrangements?"

Respondents unanimously believed that the Alternative Modification would be better than the current arrangements, and cited the same Objectives as for the Proposed Modification above. The views given matched those of the Group as detailed in Section 7 of the main Assessment Report.

### "Would the Alternative Modification P245 help to achieve of the Applicable BSC Objectives when compared to the Proposed Modification?"

Respondents unanimously believed that the Alternative Modification would be better than the Proposed Modification. The respondents cited either Applicable BSC Objectives (c) and (d), or only Applicable BSC Objective (d). The views given matched those of the Group as detailed in Section 7 of the main Assessment Report.

### "What are the impacts and costs of the P245 Proposed Modification / P245 Alternative Modification on your organisation?"

Responses were the same for the Proposed Modification and Alternative Modification. Respondents reported either no impact or a minor impact (to amend their systems and/or processes). The industry implementation costs were generally described as minimal or low.

### "Do you support the implementation option preferred by the Modification Group?"

Of the eight Assessment Consultation respondents, six agreed with the Group's proposed implementation strategy. Two respondents believed P245 should be implemented in a stand alone Release at the earliest available Implementation Date. See below for the Group's discussion on Implementation Dates.

### "Are there alternative solutions that the Modification Group has not identified, that they should consider?"

Respondents did not identify any alternative solutions.

### "Do you agree with moving the timing requirements for attempting to obtain Meter readings for sites entering, and staying in, the Long Term Vacant Sites process into a Code Subsidiary Document?"

Respondents unanimously agreed with this approach, commenting that:


© ELEXON Limited 2010

- The timescales themselves are a 'how' and not a 'what', and therefore would be more appropriately placed in BSCP504; and
- It would be more efficient (quicker and simpler) to change the timing parameters using the Change Proposal process rather than the Modification Proposal process.

### "Do you think changing the timescales to be referenced in 'calendar days' would help address the BSC Audit issue in this area?"

Respondents unanimously agreed that this would help with the BSC Audit issue, noting that 'calendar days' are less open to interpretation than 'months'. However, one respondent noted that they would have no objections to the use of Working Days instead of 'calendar days' if this was preferred by other Parties.

ELEXON also asked the BSC Auditor to assess the impact of the P245 changes. After discussions with the BSC Auditor, ELEXON considers that the Proposed Modification or the Alternative Modification on its own will not close the associated Market Audit Issue.

The reason for this is that the LTV Market Audit Issue covers the following three areas:

- The timescales issue (as identified by P245);
- Lack of a clear Audit Trail from some participants; and
- Perceived lack of clarity around what would be considered to be "proactive" attempts to identify the owner/occupier of a LTV site.

P245 looks to address one of these issues and so, on its own, would not close the Market Audit Issue. ELEXON notes that the P196 Review Group discussed all three issues, and that more information about its conclusions is available in SVG100/05.

### "Do you have any further comments on P245?"

No respondents had any further comments.

## Transmission Company Analysis

The Transmission Company considered that the Proposed Modification and Alternative Modification would better facilitate BSC Applicable Objective (c) as:

- The solution appears to align closer to Supplier Meter read cycles; and
- It would remove the potential for any confusion in how to implement the obligations.

The Transmission Company noted that the Proposed Modification and the Alternative Modification would not impact:

- Its ability to operate efficiently, economically and in a co-ordinated manner;
- Its systems and processes; or
- Security of Supply.

The Transmission Company also noted that:

- It agreed with moving the LTV timing parameters from the BSC to BSCP504; and
- Calendar days could be viewed as a clearer obligation than a monthly defined obligation. Therefore, potentially this could address the concerns raised under the BSC Audit.


© ELEXON Limited 2010

## Modification Group's discussion of consultation responses

### Applicable BSC Objectives

The Group noted that respondents' views aligned with their own, and that all respondents preferred the Alternative Modification over the Proposed Modification.

### Implementation approach

After considering the consultation responses, the Group agreed to amend its implementation approach. The Group agreed with the suggestion of some respondents that P245 should be delivered as early as possible. As P245 can be considered to be an 'enabling' change, Suppliers who choose to use the relaxed timescales at a later date will not be disadvantaged.

You can find further details in Section 6 of the main Assessment Report.

### Moving LTV timescales to BSC504

The Group noted that respondents unanimously supported moving the LTV timescale parameters from the BSC to BSCP504.

### Impact of P245 on the BSC Audit

The Group noted that respondents agreed that P245 would improve the LTV BSC Audit issue. The Group also noted the Auditor's view and commented that there would always be a degree of subjectivity in interpreting the term 'proactive'; however this was outside the scope of P245 and had been considered separately by the P196 Review Group.

The Group believed that although P245 may not in itself close the whole Market Audit Issue, it would help with one part of it by making it easier for Suppliers to understand and apply the LTV timescale requirements. Greater clarity in the LTV timescales and process should in itself make the LTV arrangements easier to audit.


© ELEXON Limited 2010

# 4 Long Term Vacant Materiality Analysis

## Conclusions

The Proposer has conducted analysis and found that currently 18% of their LTV sites are initially excluded from the LTV process under the current timescale of 3 months, but could be included under the P245 timescale of 75 days. These sites currently have to be confirmed as LTV using a subsequent site visit. This prolongs the period of time in which they continue to have a non-zero EAC in Settlement which does not reflect their true (zero) consumption.

ELEXON used the Proposer's analysis (18% of LTV sites initially excluded from the LTV process) to assess the volume of potentially misallocated energy that can be attributed to the sites in the process at a point in time. Based on the Proposer's analysis, ELEXON has calculated that, **across the market, between 5,400 and 9,000 sites are initially excluded from the LTV process**. By initially excluding these sites, **the potentially misallocated energy is between 7,859MWh and 13,099MWh** (depending on the total number of LTV sites).

## Method

We used the percentage of sites identified by the Proposer (18%) and expanded it to cover the entire LTV market. To do this, we asked the BSC Auditor how many sites are Long Term Vacant. They responded that without further investigation their best estimate was between 30,000 and 50,000. We used these two numbers in our materiality calculations.

We applied the current distribution of Profile Classes (PC) in the market to the above numbers of Metering Point Administration Numbers (MPANs) (30,000 or 50,000) in the LTV process. We then calculated that 18% of 30,000 and 50,000 is 5,400 and 9,000, respectively; and applied the average of the Default EACs (there is one for each GSP Group) for that PC to the MPANs, diving by 1000 (as the Default EACs are expressed in KWh) to give MWh figures.

We then multiplied by 0.25 to represent 3 months (the EAC figures are annual volumes) because these are sites that did become LTV at their next reading, so they will have 'missed out' on 3 months of LTV status. This gives figures of 7,859MWh and 13,099MWh.

## Assumptions

1. All Suppliers operating using a 3 month read cycle for potentially LTV sites (in reality some use 6 month as a standard but some will use targeted reads to get these sites into the process/get a read);
2. Distribution of LTV sites (in terms of PC) reflects the overall market;
3. Distribution of sites with D0004s between 75 and 90 days reflects overall market;
4. All sites with D0004s between 75 and 90 days fall into LTV process at the next read;
5. Default EACs are reflective of energy volume entering Settlement for the period where the sites are not classed as LTV;
6. All Suppliers use the Gross Volume Correction (GVC) process to correct misallocated volume identified after Final Reconciliation (RF); and
7. The non zero EAC for the period of missed LTV status crystallises in Settlement (see Option 2 below).


© ELEXON Limited 2010

## What do the materiality figures mean?

For each site which initially misses out on being LTV, there are two potential options. These are shown in the diagram below:

**Figure 1 – options for sites on 3 month read cycles which initially miss out being classified as LTV**

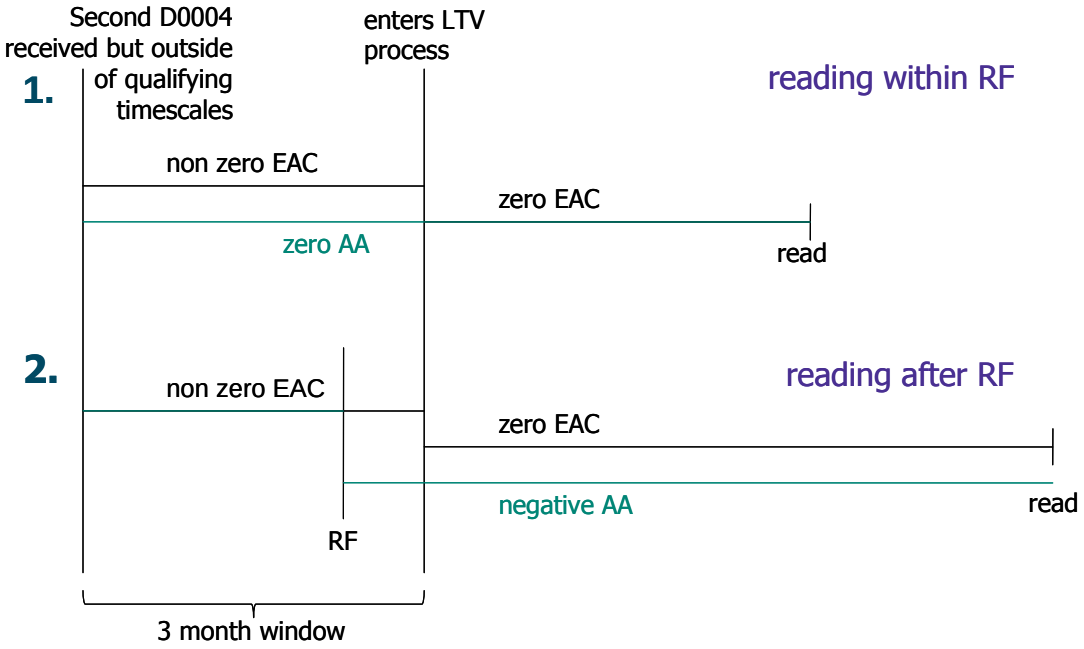


1. If a reading is obtained within RF (assuming in this case there has been no consumption since the last read), the non zero EAC will be replaced with a zero Annualised Advance (AA) at the later run types – ultimately the correct volume will enter Settlement for the correct periods.
2. If a reading is not obtained within RF, some or all of the non zero EAC will have crystallised. Gross Volume Correction (GVC) could be applied to correct the overall volume (likely creating a negative AA). This means that the volume in Settlement will be right but it will be misallocated.

The effect for each site depends on how long the site stays in the process. Assuming all sites stay in the process for at least 17 months i.e. the length of time taken for the entire 3 month lag period to pass RF, the figure calculated is the amount of energy that will be misallocated due to a percentage of the sites having missed out on entering the LTV process for one read cycle due to site visits being too close together to qualify.

## Group's views on the analysis

The Group commented that the analysis indicated P245 would:

- Reduce the volume of misallocated energy arising from LTV sites that enter later than necessary into the LTV process – therefore improving the accuracy of Settlement; and
- Improve the equality across the market for those Suppliers that do not use GVC to correct energy misallocations identified after RF (i.e. they would be less disadvantaged from not using GVC).


© ELEXON Limited 2010

# 5 Related Changes

In addition to P245, we raised 5 Change Proposals (CPs) to address the P196 Review Group's other recommendations.

**Table 3 – Related LTV Change Proposals**

| Change Proposals raised following P196 Review Group | | |
|---|---|---|
| CP number | CP title | Status |
| CP1304 | Exclusion of certain Site Visit Check Codes (SVCC) within the Long Term Vacant (LTV) site process | CP1304 ensures that LTV sites are not automatically removed from the LTV process as a result of receiving certain SVCCs. It was approved by the SVG on 29 September 2009 for inclusion in the February 2010 Release. |
| CP1305 | Use of Site Visit Check Code (SVCC) 20 with additional information in the Long Term Vacant (LTV) process | CP1305 proposed that where a SVCC of 20 is received with 'site not occupied'/'long term vacant' or equivalent written in the additional information field it should be treated as a SVCC 02 'Site not occupied'. It was rejected by the SVG on 29 September 2009 as the change would introduce a manual process which would create ambiguity within the industry and reduce the importance of the SVCC 02 code in the D0004 flow. |
| CP1306 | Removal of second criterion for identifying a site as a Long Term Vacant (LTV) | CP1306 removes the second criterion in BSCP504 for classifying a site as LTV ( 'The NHHDC is unable to gain access to read the Meter') as duplicating the criterion around D0004s. It was approved by the SVG on 29 September 2009 for inclusion in the February 2010 Release. |
| CP1307 | Minor Changes to the Long Term Vacant Site Process | CP1307 introduces clarifications to improve the LTV process. It was approved by the SVG on 3 November 2009 for inclusion in the February 2010 Release. |
| CP1308 | Changes to Long Term Vacant Site process where a reading is obtained via a warrant | CP1308 allows a warrant read to be replicated at the start of the next LTV period, where the warrant read has caused the site to fall out of the LTV process. It was approved by the SVG on 29 September 2009 for inclusion in the February 2010 Release. |


© ELEXON Limited 2010

# 6 Timetable and Responsibilities

**Table 4 – P245 progression timetable**

| Date | Activity |
|---|---|
| 23/10/09 | Modification Proposal P245 raised |
| 12/11/09 | Initial Written Assessment (IWA) presented to the BSC Panel |
| 17/11/09 | First Assessment Procedure Modification Group meeting held |
| 26/11/09 | Request for Transmission Company analysis issued |
| 26/11/09 | Assessment Consultation issued |
| 10/12/09 | Transmission Company analysis returned |
| 10/12/09 | Assessment Consultation responses returned |
| 16/12/09 | Second Assessment Procedure Modification Group meeting held |
| 14/01/10 | Assessment Report presented to the BSC Panel |

**Table 5 – Estimated P245 progression costs up to an Authority decision**

| Estimated progression costs based on current timetable | |
|---|---|
| Meeting costs (including Modification Group member expenses) | £1000 |
| Non-ELEXON legal and expert costs | £0 |
| Service Provider impact assessment costs | £0 |
| ELEXON resource | 62.5 man days, equating to £15,000 |


© ELEXON Limited 2010

**Table 6 – P245 Modification Group attendance**

| Member | Organisation | 17/11/09 | 16/12/09 |
|---|---|---|---|
| Ysanne Hills | ELEXON (Chair) | Y | Y |
| Andrew Wright | ELEXON (Lead Analyst) | Y | Y |
| Colette Baldwin | E.ON UK (Proposer's representative) | Y | Y |
| Eric Graham | TMA Consulting | Y | Y |
| Pete Butcher | SSE | Y | Y |
| Stuart Evans | Scottish Power | Y | Y |
| Mark Field | RWE npower | Y | Y |
| Ben Fuller | IMServe | Y | N |
| **Attendee** | **Organisation** | **17/11/09** | **16/12/09** |
| David Ahmad | ELEXON (Lawyer) | Y | Y |
| Kathryn Coffin | ELEXON (Technical Support) | Y | Y |
| Helen Boothman | ELEXON (Technical Support) | Y | Y |
| Peter Haigh | ELEXON (Observer) | Y | N |
| Thea Hutchinson | Ofgem | Y | N |
| Matthew Osborne | Ofgem | Y | Y |
| Amy Beadlby | E.ON UK | Y | N |
| Sue Bemanis | E.ON UK | Y | N |
| Nat Masters | Opus Energy | Y | N |


© ELEXON Limited 2010