P363 'Simplifying the registration of new configurations of BM Units' & P364 'Clarifying requirements for registering and maintaining BM Units'

P363 seeks to simplify the process for the registration and maintenance of Balancing Mechanism (BM) Units, whilst P364 seeks to improve the permissible configurations of BM Units.

P363 and P364 (P363/4) are being progressed together as a single solution which will apply equally to both.

P363/4 applies only to BM Units that are not Supplier BM Units or Interconnector BM Units.

This Assessment Procedure Consultation for P363 and P364 closes:

5pm on **Thursday 28 February 2019**

The Workgroup may not be able to consider late responses.

The P363 and P364 combined Workgroup initially recommends **approval** of the P363/4 combined solution

P363/4 is expected to impact:

- Generators
- Suppliers registering generating BM Units
- The Transmission Company
- ELEXON
- The Imbalance Settlement Group (ISG)

ELEXON

Phase

Initial Written Assessment

Definition Procedure

Assessment Procedure

Report Phase

Implementation

© ELEXON Limited 2019

Contents

1	Summary	3
2	Why Change?	6
3	Solution	10
4	Impacts & Costs	20
5	Implementation	23
6	Workgroup's Discussions	24
7	Workgroup's Initial Conclusions	38
Appendix 1: Workgroup Details		40
Appendix 2: BM Unit registration post implementation		43
Appendix 3: BM Unit criteria development		46
Appendix 4: Glossary & References		49

About This Document

The purpose of this joint P363 and P364 Assessment Procedure Consultation is to invite Balancing and Settlement Code (BSC) Parties and other interested parties to provide their views on the single solution that will address both P363 and P364, and on the potential amalgamation of the two Modifications. The combined P363 and P364 Workgroup will then discuss the consultation responses, and decide whether to recommend to the BSC Panel at its meeting on 14 March 2019 on whether P363/4 should be amalgamated and whether or not to approve P363/4.

There are six parts to this document:

- This is the main document. It provides details of the solution, impacts, costs, benefits/drawbacks and proposed implementation approach. It also summarises the Workgroup's key views on the areas set by the Panel in its Terms of Reference, and contains details of the Workgroup's membership and full Terms of Reference.
- Attachments A-C contain the draft redlined changes to the BSC for P363/4.
- Attachment D contains the specific questions on which the Workgroup seeks your views. Please use this form to provide your response to these questions, and to record any further views or comments you wish the Workgroup to consider.
- Attachment E contains the draft business requirements to deliver the P363/4 solution.

Contact

Chris Wood

020 7380 4142

chris.wood@elexon.co.uk

© ELEXON Limited 2019

1 Summary

Following ELEXON's review of Metering Dispensation the decision was made to raise two separate Modifications, P363 'Simplifying the registration of new configurations of BM Units' and P364 'Clarifying requirements for registering and maintaining BM Units', to address the issues that were found. Separate Modifications were proposed to address the two different defects at hand. It was thought that by keeping the Modifications separate we avoid the possibility of them being dependent on each other when it comes to approval and/or rejection. However, as both the solutions developed, it was realised that a single solution would address both defects. It is therefore proposed to amalgamate P363 and P364 into a single modification. We seek feedback via this combined Assessment Procedure Consultation on this approach. For more detail on this, please see section three.

Why Change?

P363 identified that there are several configurations going through the Non-Standard Balancing Mechanism (BM) Unit process that are seen (and approved) by the Imbalance Settlement Group (ISG)[1] repeatedly and should, therefore, be treated as Standard. The Non-Standard BM Unit application process can double the time for registration and is therefore less than efficient.

P364 identified that the BM Unit registration process is not as efficient as it can be. For example, applications where the configuration would otherwise be classified as a Standard BM Unit are progressed as Non-Standard because more than one Party is involved. As with P363, this extends the registration timeframe and leads to inefficiencies. The P364 Workgroup also identified that changes of configuration are not always notified to ELEXON and the Central Registration Agent (CRA).

Solution

The combined P363/4 Workgroup identified a single solution that will remedy both the P363 and P364 defects. The proposed solution for P363/4 has four elements:

- Expand BSC Section K 'Classification and registration of Metering Systems and BM units' Section 3 criteria for those BM Unit configurations that are deemed to meet the conditions to be registered as a Standard BM Unit;
- Lay down new criteria for what is considered to be a Standard BM Unit;
- Change the BSC so that an application to register BM Units must either meet the configuration criteria (bullet one above) **or** align with the new list of registration criteria (bullet two above) to be considered as a Standard BM Unit; and
- Removing the need to apply for a Non-Standard BM Unit where the configuration is Standard but there is more than one Party involved.

A full list of how known and expected configurations will be considered is in Appendix 2 and summarised below.

[1] The BSC places responsibility on the Panel who has delegated it to the ISG.

© ELEXON Limited 2019

Standard BM Units:

- Generating Unit[2];
- Closed Cycle Generating Turbine (CCGT) Module2;
- Power Park Module (PPM)2;
- Central Volume Allocation (CVA) registered Imports though the Station Transformers2;
- Directly Connected Premises at one Boundary Point2;
- Supplier BM Unit2;
- Annex I-2 BETTA BM Units2;
- Interconnector BM Unit2;
- Combined Offshore BM Unit (COBMU)2;
- Directly Connected Premises at more than one Boundary Point, less than the size of a Small Power Station;
- Combination of Generating Units connected to the Total system, less than the size of a Small Power Station;
- Electricity Storage Module, less than the size of a Small Power Station;
- Hybrid Plant – PPM or Reciprocating Generator plus Storage Module, less than the size of a Small Power Station;
- Back-up assets for a CVA BM Unit registered in Supplier Volume Allocation (SVA) of less than or equal to [415V/ 1KV];
- Low voltage Import assets connected at different boundary points at Offshore PPMs combined with PPM/COBMU;
- Different Parties registering Imports in one BM Unit and Exports in another BM Unit for the same Plant and Apparatus;
- More than one BM Unit connected through a single CVA Boundary Point where the Registrant of the BM Units is the same BSC Party2; and
- More than one BM Unit connected through a single CVA Boundary Point where the Registrants of the BM Units are different BSC Parties.

Non-standard BM Units:

- Directly Connected Premises at more than one Boundary Point more than the size of a Small Power Station;
- Combination of Generating Units connected to the Total System, more than the size of a Small Power Station;
- Electricity Storage Module, more than the size of a Small Power Station[3];

[2] Currently a Standard BM Unit.
[3] Subject to Gide Code Modification GC0096, this may in future become a standard configuration.

© ELEXON Limited 2019

- Hybrid Plant – PPM or Reciprocating Generator plus Storage Module, more than the size of a Small Power Station;
- Two or more onshore PPMs controlled as a single entity, more than the size of a Small Power Station;
- Open Cycle Gas Turbines (OCGTs) (including CCGT conversions); and
- Back-up assets for a CVA BM Unit registered in SVA of more than [415V/1KV].

Configuration not allowed

The same Party registering Imports in one BM Unit and Exports in another BM Unit will still not be allowed, which is commensurate with present arrangements.

Impacts & Costs

P363/4 will be a document only change to the BSC. We anticipate that National Grid, Generators and Suppliers registering Generating Units will be impacted by this Modification but, we seek confirmation via this consultation.

We estimate the ELEXON implementation costs to be approximately £2,200 to implement the changes to the BSC and amend internal procedures. If approved, these changes will reduce the time and effort required to progress Non-Standard BM Unit applications.

Implementation

P363/4 is proposed for implemented on 27 June 2019 as part of the June 2019 BSC Release. This is the next available BSC Release that can include this Modification.

Recommendation

The **majority** of the Workgroup initially believes that P363/4 would better facilitate Applicable BSC objectives (c) and **unanimously** believe P363/4 would better facilitate Applicable BSC Objective (d) and so P363/4 should be **approved**.

© ELEXON Limited 2019

2 Why Change?

Background

If a potential BM Unit is a Standard BM Unit, the registration process takes around 30 Working Days (WD). If it is a Non-Standard BM Unit, BSC Section K3.1.6 requires the ISG to determine if the proposed BM Unit should be registered. Parties will send an application for a Non-Standard BM Unit to ELEXON, who presents the application, on the applicant's behalf, for ISG determination. Non-Standard BM Units take around 60 (WDs) to register to take account of ISG meeting schedules.

Modifications P363 and P364 were raised after ELEXON conducted a review of Metering Dispensations and non-standard BM Units. ELEXON recommended introducing new Standard BM Unit configurations, which reflect commonly used Non-Standard BM Unit configurations, and a generic Non-Standard BM Unit process.

What is a Standard BM Unit?

A Standard BM Unit is a BM Unit that meets one of the configurations in BSC Section K 3.1.4. If it does not meet this configuration, it is a Non-Standard BM Unit.

What is a BM Unit?

BM Units are used under the BSC to account for all energy that flows on to or off of the Transmission Systems and Distribution Systems (collectively, the Total System). In general terms, several types of BM Unit are referred to, which represent different forms of connection to the Total System and participation in Settlement. The general type is marked using a prefix in each BM Unit's Identification as described in the table below.

BM Unit type[4]	Prefix	Overview
Directly Connected	T_	BM Units directly connected to the Transmission System. These are typically Generation Units.
Embedded	E_	BM Units embedded within a Distribution System.
Interconnector	I_	BM Units related to an Interconnector.
Supplier	2_	BM Units covering Supply. These contain all of a particular Supplier's Meters for a given Grid Supply Point (GSP) Group.
	C_	These Additional Supplier BM Units are registered solely for the purpose of allocating Contracts for Difference (CfD) Assets.
Miscellaneous	M_	Other types of BM Units that don't fit the above categories. This prefix does not apply to newly registered BM Units.

What is Plant and Apparatus in relation to a BM Unit?

Plant means fixed or movable items used in the generation, supply, distribution and/or transmission of electricity, other than Apparatus.

Apparatus means all equipment in which electrical conductors are used or supported or of which they form part.

A BM Unit means a unit established and registered (or to be established and registered) by a Party in accordance with BSC Section K3 or, where the context so requires, the Plant and/or Apparatus treated as comprised in or assigned to such unit for the purposes of the Code

Parties register BM Units in accordance with BSC Section K3.2 and BSCP15 'BM Unit Registration'. The CRA validates and processes applications following consultation with ELEXON, the Central Data Collection Agent (CDCA) and National Electricity Transmission System Operator (NETSO[5]).

NETSO uses BM Units for Balancing the Total System to co-ordinate and direct the flow of electricity efficiently, economically and in a co-ordinated manner. BM Unit Physical

[4] A new BM Unit type, Secondary BM Unit will be introduced following implementation of the P344 solution as part of the February 2019 BSC release. Neither P363 nor P364 will be affected.

[5] The BSC currently refers to the Transmission Company, but from 1 April 2019, the System Operator functions are being transferred to a new licence and legal entity NETSO. Ofgem approved P369 'National Grid Legal Separation changes to BSC' on 24 September 2018, which will align the BSC to the legal separation of National Grid's System Operator and Transmission Operator roles.

© ELEXON Limited 2019

Notifications (PNs) are used in Demand and Generation forecasting. BM Units are the baseline for Bid-Offer Acceptances and are used for System planning and operation.

Use of BM Units:

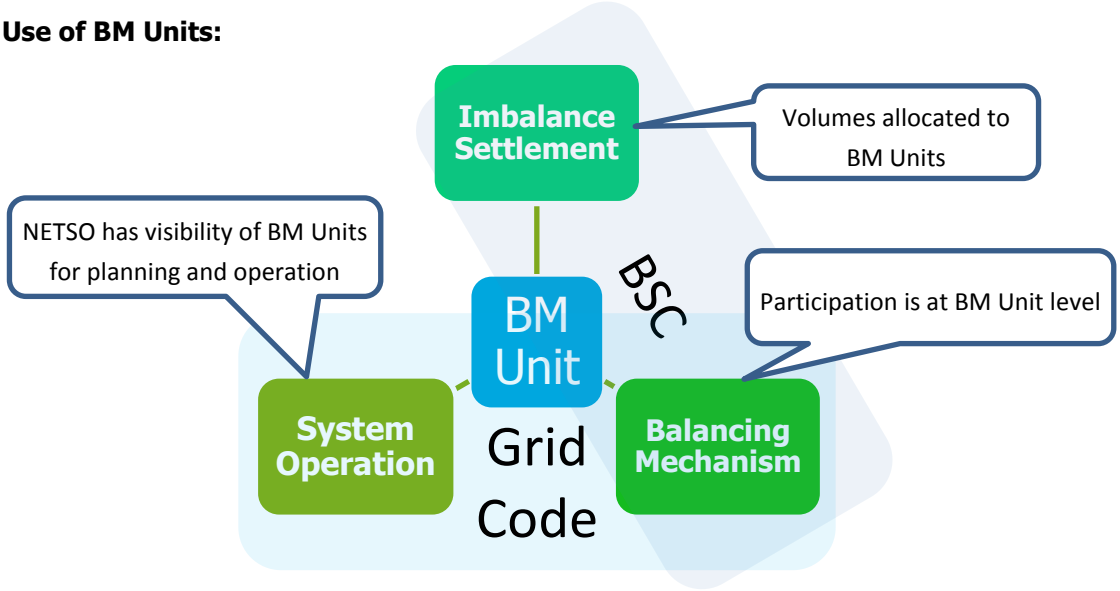

BSC Section K3.1 application

BSC Section K3.1 sets out the requirements for configurations of BM Units, other than Supplier BM Units and Interconnector BM Units[6]. There are four key paragraphs that must be considered when registering BM Units:

- K3.1.2 sets out the conditions that a BM unit must satisfy unless ISG has determined otherwise or K3.1.4 applies;
- K3.1.4 lists the configurations of Plant and Apparatus that are considered to meet the requirements to be a Standard BM unit;
- K3.1.5 states that K3.1.6 shall apply if:
    - K3.1.4 does not apply;
    - A Party thinks their proposed BM Unit satisfies K3.1.2 but not K3.1.4;
    - The CDCA or CRA is in reasonable doubt if K3.1.4 applies; or
    - Proposed Plant and Apparatus will share a CVA Boundary Point with another Party (regardless of whether K3.1.4 applies).
- K3.1.6 allows the ISG to determine if Plant and Apparatus shall be registered.

This means ISG must decide if a proposed BM Unit can be registered unless it is in K3.1.4.

Standard BM Unit configurations

The Standard BM Unit configurations of Plant and Apparatus that are deemed to satisfy the requirements to be considered a BM Unit in BSC Section K3.1.4 are:

- Any Generating Unit, CCGTModule or PPM whose Metering System(s) for its Exports is registered in Central Meter Registration Service (CMRS);

[6] For the purposes of this Consultation it should be taken that we are not referring to Supplier or Interconnector BM Units but only those BM Units covered by BSC Section K3.1.

© ELEXON Limited 2019

- The Plant and Apparatus which comprises part of, and which Imports electricity through the station transformer(s) of, a Generating Plant, where the Metering System(s) for such Imports is registered in CMRS;
- The premises (of a Customer supplied by the Party) which are directly connected to the Transmission System, provided that the premises are only connected at one Boundary Point;
- An Interconnector BM Unit in accordance with BSC Section K5;
- A Supplier BM Unit (Base BM Unit or an Additional BM Unit) in accordance with BSC Section K3.3; or
- Any two or more Offshore PPMs where the Party wishes to combine these as a single BM Unit and NETSO determines that such a configuration is suitable to constitute a single Combined Offshore BM Unit.

Changes to BM Unit configurations

BSC Section K3.2.8 requires Lead Parties to keep their registration up-to-date by notifying the CRA of any change of details. The BSC does not define BM Unit 'registration details' but, BSC Section K3.2.3 specifies certain details an applicant must provide when applying for a BM Unit. Additionally, BSCP15 requires applicants to complete form BSCP15/4.1 to register a BM Unit, which includes a table called 'BM Unit Registration Details'.

What is the issue?

Innovation and improvements in design, cost efficiency and commercial opportunities for renewable and smaller-scale generator technologies mean that there are a growing number of developments using novel, Non-Standard configurations of Plant and Apparatus.

Number of Non-Standard BM Units in the Last Ten Years

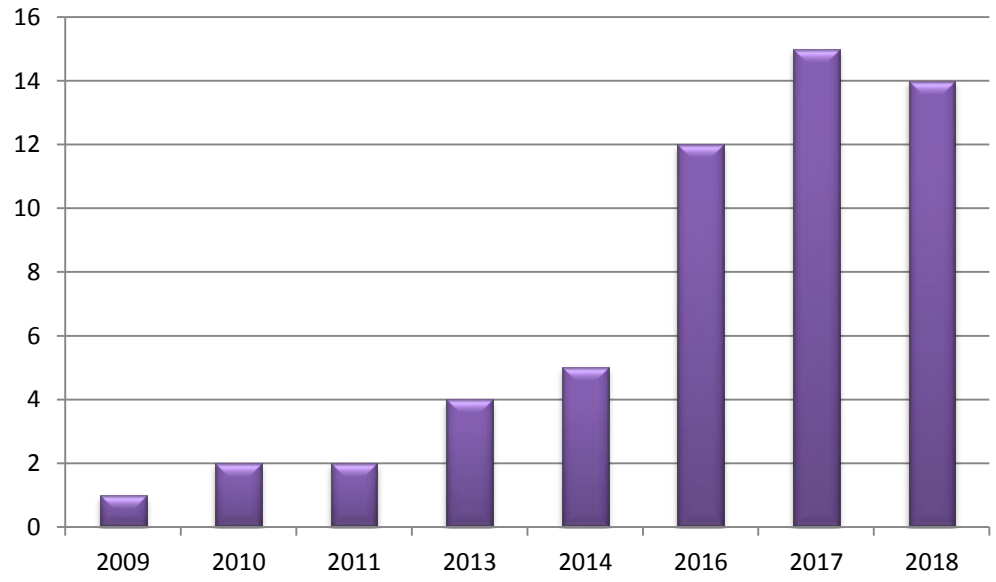

From recent experience, and expected future indications, the configuration of Plant and Apparatus on sites challenge the existing BM Unit categories and requirements. The BSC requires the ISG to consider each Non-Standard BM Unit application based on its own merits and as a fresh application i.e. without reference or prejudice to previous Non-

© ELEXON Limited 2019

Standard approvals. This means that, even though the same circumstances are seen time and again, each must be considered separately.

P363 Issue

BSC Section K has been designed to ensure that the registration process for Metering Systems and BM Units is as robust as possible. The requirements of BSC Section K are such that the integrity of Settlement and, by association, Balancing, is as robust as possible during a Party's first encounter with the Settlement – the Registration process. The Proposer acknowledges the need for thorough robustness and is not suggesting that BSC Section K is not fit for purpose. Instead, they are proposing that parts of BSC Section K3 are not as reflective of the changing industry landscape as they could be. Similarly, there is not as much scope to allow for future-proofing and innovation as there could be while still maintaining Settlement integrity.

Only Standard BM Unit configurations can register in the shortest possible time of 30 WDs. Historically, this hasn't been too much of an issue as almost all BM Unit configurations have been Standard. However, the industry is changing and we are seeing more non-traditional business models and BM Unit configurations. This means that any innovative BM Unit configuration that is not in BSC Section K3.1.4 is forced down the Non-Standard route and their registration time is doubled. There is a perception that this can stifle innovation and, by extension, could be seen as a barrier to entry.

The Non-Standard BM Unit application process is not as efficient as it could be and can, in some cases, be quite time-consuming. In the last three years, ELEXON has processed an increasing number of Non-Standard BM Unit applications. As it stands, this is projected to continue as the industry undergoes considerable change brought about by new technologies, business models and regulatory arrangements. For the most part these fall into a few similar categories that have all been approved by ISG having gone through the lengthy Non-Standard BM Unit application process.

P364 Issue

The way BSC Section K3 is organised means that there is an unnecessary level of ambiguity around BM Unit Registration. Proposed BM Units, that would otherwise meet the BSC Section K3.1.4 requirements, are forced down the Non-Standard BM Unit route because more than one Party is involved. As mentioned with P363, this is time consuming for Parties, ELEXON and the ISG to progress.

Another example (which is almost the reverse of that above) of Non-Standard BM Unit registration, is where a single Party is responsible for the Imports and Exports from the same Plant and Apparatus, they may wish to register the Imports and Exports in separate BM Units. The Plant and Apparatus may satisfy one of the standard configurations in BSC Section K3.1.4. However, this approach is prohibited by BSC Section K3.1.3, which only allows the same Plant and Apparatus to be registered in more than one BM Unit where different persons are responsible for the Imports and Exports.

Additionally, the BSC is not immediately clear on what should be done when Plant and Apparatus are reconfigured in such a way that the new configuration no longer meets one of the Standard BM Unit configurations or the approved Non-Standard configuration.

© ELEXON Limited 2019

3 Solution

The proposed P363/4 combined solution will require Parties applying to register a BM Unit to demonstrate that their proposed BM Unit's configuration is either one of the configurations in BSC Section K 3.1.4 **OR** that it meets the criteria in BSC Section K3.1.2. This will widen the number of Standard BM Unit configurations that by allowing applicants two options for their Plant and Apparatus to be registered as a Standard BM Unit. Further detail of how known and anticipated configurations will be affected is in Appendix 2.

It should be noted though that neither the Proposer nor Workgroup think that two separate solutions would better facilitate Applicable BSC Objectives compared to a single solution. For absolute clarity, while we refer to the P363/4 solution, this means that, technically, both P363 and P364 have identical solutions which we have presented as a single P363/4 solution in this document. If, based on consultation responses, it becomes apparent that there is no appetite for a combined solution; the Proposer may revert to two separate solutions. The two individual solutions are included below for information and feedback would be welcome on these too.

Proposed P363/4 combined solution

The combined P363/4 solution will simplify the BM Unit registration process and reduce the number of potential Non-Standard BM Unit registrations. This will be achieved by:

- Adding new configurations to the list of those deemed to satisfy the requirements to be a BM Unit;
- Allowing proposed BM Units to satisfy the criteria to be a BM Unit as an alternative to being covered by BSC Section K3.1.4;
- Removing the need to apply for a Non-Standard BM Unit when the configuration is Standard but there is more than one Party involved; and
- Making it explicit that when the configuration changes, this needs to be notified.

This means that BSC Section K3.1.4 and BSC Section K3.1.2 will have equal standing. Specifically, if proposed BM Unit configurations either meet the requirements of BSC Section K3.1.4 **OR** the criteria in BSC Section K3.1.2[7] they will be a Standard BM Unit. Appendix 2 shows whether known configurations will be Standard or Non-Standard.

New Applicable criteria

Criterion one –Enables a person (other than the person that has registered the Metering System in the CMRS) to register a Metering System in the Supplier Meter Registration Service (SMRS) for Imports, provided the requirements specified in the new BSC Section K3.13A are met (hereafter referred to as 'auxiliary Supply' – see below). This creates a specific exemption from the existing requirement that only one Party is responsible for the Exports and/or Imports from or to the Plant and/or Apparatus comprised in the BM Unit.

The BSC currently requires that only one Party register the Export and the Import. This means that the Import cannot be split between two Parties, nor can the Export be split

[7] A BM Unit configuration could meet the requirements of both K3.1.2 and K3.1.4 and still be a Standard BM Unit.

© ELEXON Limited 2019

between two Parties. It also means that only one Party shall be responsible for the Import and Export i.e. the Export and Import for a BM Unit is attributable to the same Party.

The new criteria creates a specific exception to this rule, allowing more than one party to be responsible for Imports where the Plant and/or Apparatus comprised in a BM Unit is also receiving Imports from a Metering System registered in the SMRS.

Criterion two – Involves no substantive change to the BSC. It will require that Exports and/or Imports of electricity from and to the BM Unit are capable of being controlled independently of other Exports and/or Imports for other BM Units (but subject to exemptions for Teleswitch Groups) save to the extent, such Imports are measured by Metering Systems that are part of a Teleswitch Group. The proposed amendment merely sets out the exception related to the Teleswitch Group separately in BSC Section 3.3.9A.

This means that NETSO will continue to control each BM Unit separately and will be able to dispatch Plant and Apparatus in the same was as they do now while allowing them to retain control of the Transmission System.

Criterion three – Involves no substantive change to the BSC. It will require that quantities of electricity Exported and Imported from or to the BM Unit are, or will be, determined and submitted to the Settlement Administration Agent (SAA) separately from any quantities Exported or Imported from or to any other BM Unit. This is on the basis of other obligations being met elsewhere within the Code.

This will continue to ensure that the Configuration of the Plant and Apparatus within the BM Unit is such that the flow of electricity can be accounted for correctly and accurately in Settlement as required elsewhere within the BSC. It will also continue to ensure that the flow of electricity to or from a BM Unit cannot be confused with the flow of electricity to or form another BM Unit when making Settlement calculations.

Criterion four –Enables a BM Unit to be comprised of Plant and Apparatus, whose Imports and Exports are both measured by CVA Metering System(s), to also have its auxiliary Supply measured by a SVA Metering System(s). This creates a change from the existing BSC Section K3.1.2 (d) requirement that a BM Unit does not comprise Plant and Apparatus whose Imports and Exports are measured by both CVA Metering System(s) and SVA Metering System(s).

It is technically possible that a BM Unit may be connected to two Metering Systems but, this is not economically viable in the current market. Not knowing whether a BM Unit would be available for dispatch from one period to another could cause concerns in for NETSO Balance planning, hence why this criteria has been included.

Criterion five – Allows smaller aggregations of Plant and Apparatus, which would satisfy the conditions set out in BSC Section K3.1.2 (a), (b) and (c), to be comprised in a single BM Unit. This is on the provision that the registered capacity of that collection of Plant and Apparatus is no larger than that specified for a Small Power Station in the Grid Code, and the Export from the collection of Plant and Apparatus is subject to common control as a single BM Unit. This creates a change from the existing BSC provision that prevents smaller aggregations from being comprised in a single BM Unit.

What is a Physical Notification?

A Physical Notification (PN) is a notification from a Generator or a Supplier of the amount of electricity that it intends to produce or consume in a given Settlement Period.

PNs are submitted to NETSO and can be updated at any point prior to Gate Closure. The prevailing PN at Gate Closure is the Final PN (FPN).

It can be broken down for various points in the half-hour called a spot time. The values for the spot time show the actual amount that will be taken at that spot time. This allows NETSO to be able to see how volumes will fluctuate within the Settlement Period.

Further information can be found at Appendix 1 to section BC1 of the Grid Code

© ELEXON Limited 2019

Not including this criterion could lead to the aggregation of large generating units, making it harder for NETSO to take actions to Balance the Total System. However, NETSO does recognise that its need to balance the Total System efficiently needs to be weighed against market evolution and suggested that aggregation can occur up to the size of a 'Small Power Station'. In the Grid Code 'Small Power Station' means:

- Up to 50MW in England and Wales;
- Up to 30MW in South Scotland; and
- Up to 10MW in North Scotland.

All current multi-unit Generators and electricity storage modules are less than 50MW. One is in South Scotland and is less than 30MW. The others are in England and Wales.

Grid Code modification GC0117, 'Improving transparency and consistency of access arrangements across GB by the creation of pan-GB commonality of PGM requirements', was raised on 20 June 2018. It proposes standardisation of the definition of Small Power Station across GB, to 10, 30 or 50 MW, or a different value, or even the removal of all references to "Small", "Medium" and "Large" from the Grid Code, and so an actual value of 50MW, or reference to licensable status[8], may be more appropriate.

The Proposer and Workgroup (WG) are inclined to use the definition in the Grid Code as this would reduce the possibility of needing a subsequent Modification later to change the threshold. The Proposer and WG can similarly see the value of using an arbitrary value, particularly if the values associated with a Small Power Station do reduce as has been proposed as part of GC0117. The WG suggested that the legal text could refer to 50MW.

Assessment Consultation Question
Should the BM Unit aggregation limit be based on Grid Code's definition of 'Small Power Station' or another amount? *If it should be based on another amount, what should it be and why?*
The Workgroup invites you to give your views using the response form in Attachment D

What is meant by auxiliary Supply

This can be exemplified by explaining Power Stations' domestic Supply. The Power Station will have its own internal electricity consumption e.g. to boil the kettle in the control room. This is normally powered by the Power Station itself when operating however, the Power Station operator may, for commercial reasons, choose to have the PowerStation, or parts of it, Supplied from the Total System. The auxiliary Supply, alternately, could be used at times where the Power Station itself is not producing power but, the staff still wants to make tea.

Auxiliary Supplies

This applies to proposed criteria one and four.

Size limitations

It was put forward that the limit for auxiliary Supply could be set at either 415V, based on existing BM Units or, 1kV based on the definition of low voltage used in The Electricity Safety, Quality and Continuity Regulations 2002[9]. Since March 2017 ELEXON has registered five windfarms in Scotland with SVA auxiliary Supply and three embedded electricity storage modules. One has an auxiliary Supply of 415V; and the rest are 400V.

The Proposer and WG are inclined to recommend the threshold be set at 1kV to use a defined value that allows for future larger configurations, particularly as we are expecting more Non-Standard [using current definition] BM Units over the coming years. But, they can see the value in using existing precedence to set the limit.

[8] This was as suggested by a respondent to the consultation of the BM Unit review that led to P363 and P364. A class exemption to hold a generation licence includes generators up to 50MW. Individual exemptions can be requested from the Secretary of State for larger generators, typically up to 100MW.

[9] This is used elsewhere in the BSC e.g. Commissioning of Meters as per Code of Practice four (CoP4)

© ELEXON Limited 2019

Assessment Consultation Question
Should the auxiliary/back-up limit be 415V based on precedence, 1kV based on a recognised definition of low voltage or another amount? *If it should be based on another amount, what should it be and why?*
The Workgroup invites you to give your views using the response form in Attachment D

Configuration limitations

Where auxiliary Supply will be permitted, the Plant and Apparatus must meet certain configuration requirements to prevent instantaneous through flow of electricity:

1. From the CMRS Metering System to the SMRS Metering System; and/or
2. Between different Systems.

The first restriction prevents through flow between Metering Systems where both are on the same part of the Total System (e.g. both are Distribution connected).

The second restriction is necessary from an engineering perspective. Electricity will always take the path of least resistance. If a Generation/storage unit is connected to two points of the Total System it is possible that, rather than Importing or Exporting to both points simultaneously, the electricity could use the unit to flow between the Boundary Points.

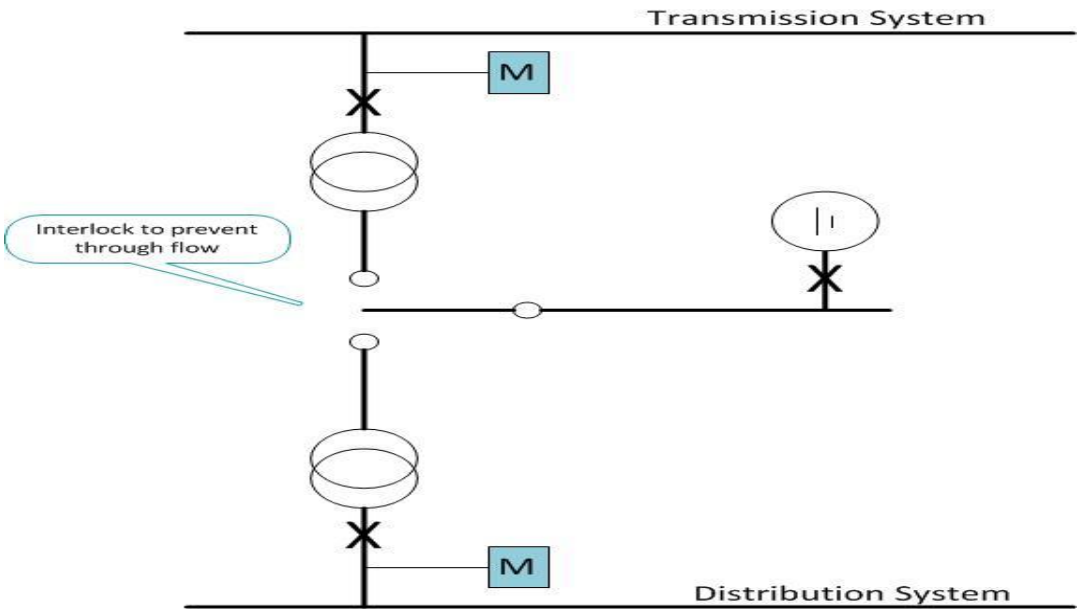

Assessment Consultation Question
Are there any other criteria that should be included in BSC Section K3.1.2? *If you believe other criteria should be considered, please provide us with what should also be included and an explanation of why it should be included.*
The Workgroup invites you to give your views using the response form in Attachment D

Teleswitch Groups

BSC Section K 3.1.2(b) refers to the lack of independent control for Teleswitch Groups. Their use is declining and there is a possibility that their infrastructure may be allowed to 'run down'. However, regardless of what may happen, Teleswitch Groups exist and the BSC needs to make provision for them.

© ELEXON Limited 2019

The revised BSC Section K3.1 will cover Directly Connected and Embedded BM Unit types (i.e. 'T_' and 'E_'). It is proposed that allowance for Suppliers to control Teleswitch Groups should be moved to BSC Section K3.3, which deals specifically with Supplier BM Units, of which Teleswitch Group BM Units are. The proposed draft legal text for BSC Section K3.3 states that criteria two (page 12) will not apply to Teleswitch Groups, which essentially emulates the final part of existing BSC Section K3.1.2 (b).

Assessment Consultation Question
Do you agree that the Teleswitch Groups caveat is better placed in K3.3 than K3.1.2? *If you disagree, we would welcome your explanation as to why you think it is not better placed in K3.3*
The Workgroup invites you to give your views using the response form in Attachment D

Proposed new configuration for BSC section K3.1.4

The P363/4 solution will introduce one new configuration to BSC section K3.1.4[10].

Offshore PPMs or COBMU supplied at low voltage and connected at different boundary points

This will allow for a much seen scenario whereby Offshore PPMs or Combined Offshore BM Units (COBMUs) have to register their auxiliary Supply as separate BM Units as they connect to the Offshore Transmission System at different Boundary Points to the PPM/COBMU. For example, a wind turbine's hazard warning light to warn shipping is normally powered by the PPM/COBMU itself but, if the PPM/COBMU is not operating; an auxiliary Supply is required. The auxiliary Supply need only be low voltage and, as such, will have a different Boundary Point to the Offshore Transmission System than the PPM/COBMU uses to Export. Making it a Standard BM Unit will negate the need for ISG to go through the process of approving something they have approved in other guises many times already.

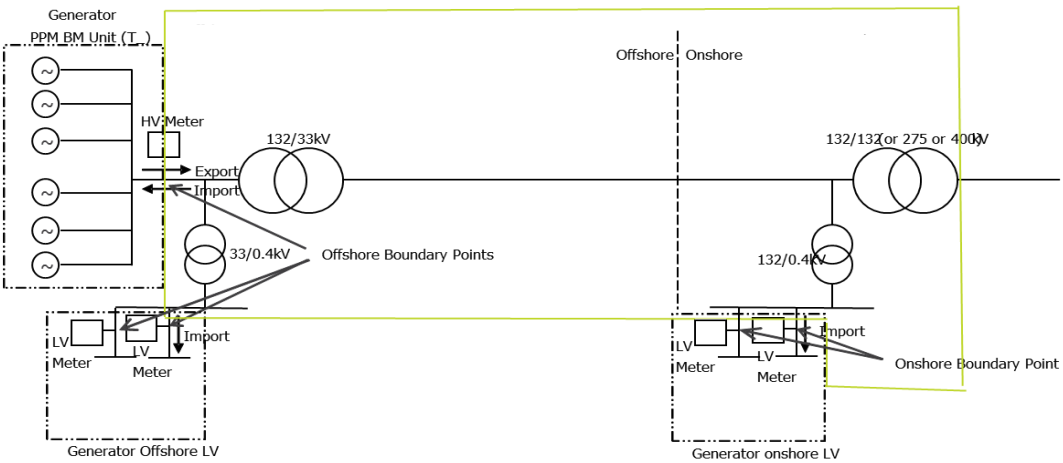

What are PPMs and COBMUs?

An Offshore PPM is a collection of Offshore Generating Units that are powered by an intermittent power source (e.g. wind), joined together by cables forming part of a user system with a single point of connection to an Offshore Transmission System.

A COBMU is one or more Offshore PPMs where the NETSO has agreed that they may be combined into a Single BM Unit

What is a Boundary Point?

A point at which any Plant or Apparatus not forming part of the Total System is connected to the Total System.

The Total System, for the purpose of P363/4 means the Transmission System or each Distribution System.

The Total System also compromises Offshore Transmission System User Assets as defined by the Grid Code

[10] N.B. the draft legal text lists this as three separate configurations in K3.1.4 – one for Offshore PPM, one for COBMU and one for amalgamating the low voltage assets as a single BM Unit separate to the PPM or COBMU.

© ELEXON Limited 2019

Assessment Consultation Question
Are there any other configurations of Plant and Apparatus that should be deemed to satisfy the requirements to be a BM Unit and be included in K3.1.4 that are not covered by the revised BSC Section K3.1.2 criteria? *If you believe other configurations should be included, please provide us with what should also be included and an explanation of why it should be included.*
The Workgroup invites you to give your views using the response form in Attachment X

Splitting responsibility for Import and Export for single Plant and Apparatus

BSC Section K3.1.3 states that a Plant and Apparatus can only have one BM Unit for Import and another for Export if each BM Unit is registered by different persons. Existing BSC arrangements require that in this scenario each BM Unit is registered as a Non-Standard BM Unit, regardless of whether it is a Standard BM Unit in all other respects.

P363/4 will amend K3.1.3 so that different persons can register separate BM Units for the same Plant and Apparatus if the auxiliary Supply rules apply (the only scenario where-by this can happen) and both will be Standard BM Units. For example, the auxiliary Supply could be registered by a Supplier and the Export by the Generator.

There are no configurations that we are aware of where this occurs now but, there is nothing elsewhere within the BSC or the proposed P363/4 changes to prevent this. As such, in the interest of future-proofing the BSC, and allowing for innovation, as much as possible, this change has been proposed.

The WG discussed creating a specific criterion to allow for something similar. However, this was discounted for various reasons that are discussed in depth in section seven.

Changes to configuration

Parties have to notify configuration changes if they think the changes will mean that the new configuration would either not be eligible for registration, or may be considered as Non-Standard. In order to make this more apparent, the P363/4 solution will:

- Add a new paragraph to K3.1 requiring changes of configuration to be notified;
- Amend BSCP15 so that notification of reconfiguration becomes a key milestone;
- Amend BSCP15 so that the need to notify of reconfiguration also sits alongside changes to Generation Capacity (GC) and Demand Capacity (DC); and
- Add a new table to BSCP15 for reconfiguration of BM Units process.

When Parties read about the registration process or the GC/DC change processes, they will also see that any changes of Plant and Apparatus configuration need to be notified.

NETSO and BSCCo interaction

ELEXON will continue to review applications for BM Unit registration. As the new criteria encompass NETSO's BM Unit requirements, the WG discussed whether NETSO should be given a specific veto. BSC Section K3.1.6 requires the ISG to consider NETSO's views for Non-Standard BM Units, and BSCP15 paragraph 3.1 allows NETSO to object to any BM Unit registration. As such it was agreed that nothing further needs to be added to the BSC.

© ELEXON Limited 2019

Assessment Consultation Question
Do you agree that the single P363/4 solution will address the individual defects identified by P363 and P364 i.e. is a combined solution appropriate and does it work? *If not, can you please provide an explanation?*
The Workgroup invites you to give your views using the response form in Attachment D

Amalgamating the Modifications

BSC Section F 'Modification Procedures' section 2.3 allows for amalgamation where '…the subject-matter of such Modification Proposals is sufficiently proximate to justify amalgamation on the grounds of efficiency and/or where such Modification Proposals are logically dependent on each other.'

In the case of P363 and P364 it would be more efficient in terms of preparing documents for industry and Panel consideration to only have one and not two Modifications to consider. Unless there is any particular objection made by respondents to this consultation, on behalf of the Proposer and WG, we will seek Panel approval to amalgamate P363 into P364 and take P364 forward as single Modification.

The Proposer has considered making the combined P363/4 solution simply the P364 solution and withdrawing P363. However, this would allow another Party to adopt P363 and we could, be in a situation whereby two similar Modifications are overlapping.

Assessment Consultation Question
Do you agree that P363 and P364 should be amalgamated and P364 taken forward? *If not, can you please explain what you think needs to be amended?*
The Workgroup invites you to give your views using the response form in Attachment D

Legal text

Proposed changes to BSC Section K are in Attachment A. The proposed legal text is based on the P363/4 combined solution only.

Assessment Consultation Questions
Do you agree with the Workgroup that the draft legal text in Attachment A delivers the intention of P363/4? *Please provide your rationale.*
The Workgroup invites you to give your views using the response form in Attachment D

Other redlined documents

Given the reliance on BSCP15 and BSCP68 'Transfer of Registration of Metering Systems between CMRS and SMRS' to achieve registration, it is felt that it is important, to ensure continuity, that the changes to the BSCPs are considered alongside the legal text. Proposed changes to BSCP15 are in Attachment B. Proposed changes to BSCP68 are in Attachment C.

© ELEXON Limited 2019

Assessment Consultation Question
Do you agree with the Workgroup that the draft redlining in Attachments B and C delivers the intention of P363/4? *Please provide your rationale.*
The Workgroup invites you to give your views using the response form in Attachment E

Self-Governance

The majority of the WG believed that there is no reason that P363/4 should not be progressed as a Self-Governance Modification.

The minority believed that if P363/4 better facilitates Applicable BSC Objective (c) then it has a material impact on competition and so should not be treated as Self-Governance as it materially impact Self-Governance criterion ii.

Assessment Consultation Question
Do you agree that P363/4 meets the Self-Governance Criteria and so should be progressed as a Self-Governance Modification? *Please provide your rationale.*
The Workgroup invites you to give your views using the response form in Attachment D

What are the Self-Governance criteria?

A proposal that, if implemented:

a) is unlikely to have a material effect on:
   i. existing or future electricity consumers; and
   ii. competition in the generation, distribution, or supply of electricity or any commercial activities connected with the generation, distribution, or supply of electricity; and
   iii. the operation of the national electricity transmission system; and
   iv. matters relating to sustainable development, safety or security of supply, or the management of market or network emergencies; and
   v. the Code's governance procedures or modification procedures, and
b) is unlikely to discriminate between different classes of Parties

Are there any alternative solutions?

The WG considered raising the combined solution as an alternative solution as they believed it was better than the individual solution. However, the Proposer agreed with the WG and so adopted the combined solution as the proposed solution. There is no alternative solution.

Potential P363 and P364 stand-alone solutions

Neither the Proposer nor the WG are recommending individual solutions for P363 or P364 they are, at this stage, recommending that a single combined solution that is identical for each Modification is implemented. However, they are included here for information and we would welcome feedback in the event that a combined solution is not taken forward.

P363 solution

The same new configuration proposed as part of the P363/4 solution ('Offshore PPMs or COBMU supplied at low voltage and connected at different boundary points') and another new configuration would be included in BSC Section K3.1.4. The second, new configuration is not required as part of the P363/4 solution as the new criteria proposed for BSC Section K3.1.2 will allow for this configuration so there is no need to replicate it in BSC Section K3.1.4 as part of the P363/4 solution.

This solution will simplify the registration process by creating two new Standard BM Unit configurations to be included in BSC Section K3.1.4. Both are regularly seen at ISG and by making them Standard, the requirement for ISG determinations will be greatly reduced.

© ELEXON Limited 2019

Combination of Generating Units connected to the Total system

This will allow any number of Generating Units to be combined into a single entity to give the responsible Party greater flexibility e.g. they can offer different volumes of energy for different Settlement Periods.

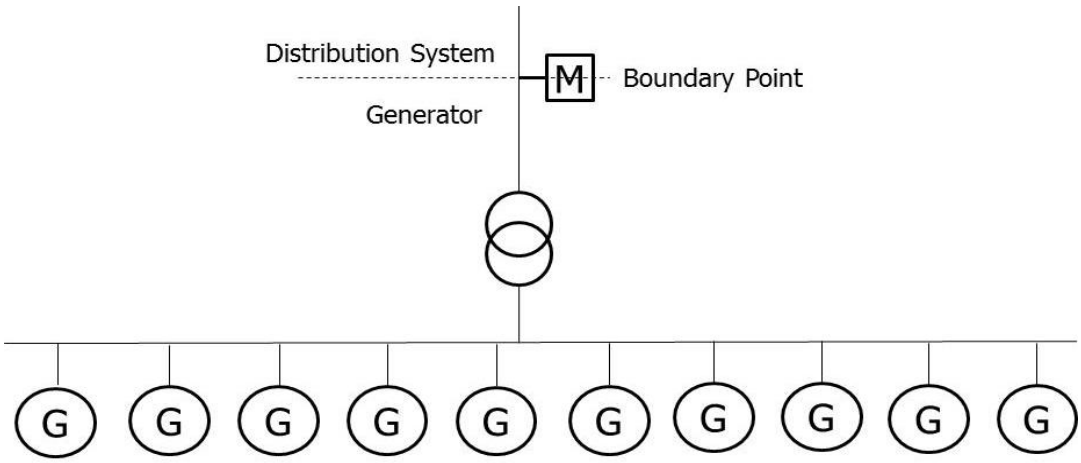

Assessment Consultation Question
Do you agree that the two configurations proposed by P363 should be incorporated into K3.1.4 were P363 to be implemented as a stand-alone solution? *If not, can you please explain what you think needs to be amended?*
The Workgroup invites you to give your views using the response form in Attachment D

P364 solution

This would amend BSC Section K3.1 to simplify the requirements for registration and allow Plant and Apparatus that would be a Non-Standard BM Unit under current arrangements to be registered as a Standard BM Unit if more than one Party is involved. It also includes changes that will clarify when and what Parties should do if the configuration of Plant and Apparatus in a BM Unit changes.

Registration of BM Units

BSC Section K wording in terms of ordering of words and terminology used (i.e. the BSC legal text) would be amended to enable greater clarity, flexibility and ease.

The types of configuration to be more easily enabled would allow:

- Two Parties to establish two BM Units for the same Plant and Apparatus (which would otherwise be a Standard BM Unit) at the same Boundary Point where one Party wishes to be responsible for the Imports to, and another Party for the Exports from to be a Standard BM Unit; and
- More than one set of Plant and Apparatus (where each is a Standard BM Unit) to share a CVA Boundary Point where different Parties are responsible for each set of Plant and Apparatus to be a single BM Unit. In this case the CDCA should be required to confirm that appropriate Aggregation Rules are agreed or are updated where applicable.

© ELEXON Limited 2019

Changes to BM Unit configuration

The solution will make changes to the BSC in the same way as proposed by the P363/4 solution so as to highlight when changes to configurations need to be notified.

Assessment Consultation Question
Do you agree that the P364 solution will make registration simpler were it to be implemented as a stand-alone solution? *If not, can you please explain what you think needs to be amended?*
The Workgroup invites you to give your views using the response form in Attachment D

© ELEXON Limited 2019

4 Impacts & Costs

We invite respondents to inform us of any impacts that the implementation of the P363/4 combined solution would have on their organisation, quantifying where possible, the approximate lead time and estimated costs associated with the identified impacts.

All impacts and costs in this section are in relation to the P363/4 solution. It is not anticipated that they will differ materially if P363 and P364 are implemented separately.

Estimated central implementation costs of P363/4

ELEXON's costs to implement P363/4 are approximately £2,200. These costs are primarily driven by the need to amend internal processes and documents. They are made up of:

- Seven day's effort to implement new internal processes and documents; and
- Two day's effort to implement document changes to the BSC and Code Subsidiary Documents (CSDs).

As part of ELEXON's foundation programme we are developing a new software platform for Parties to interact with BSC Systems. The changes to the forms in BSCP15 will necessitate a similar change in the new platform. The P363/4 changes will be included alongside other foundation programme changes due in the summer and it is not possible at the time of publishing this consultation to determine the breakdown of the costs attributable to P363/4. However, we are not expecting this to be significant in anyway and intend for the costs to be available when the Panel is requested to make a determination regarding P363/4's implementation.

It should be noted that P363/4's implementation is not reliant on the foundation programme as the redlining changes to BSCP 15 will allow P363/4 to be implemented.

It has been anticipated that the P363/4 solution will save between 4-6 WD for each Non-Standard application. In 2018, all 14 Non-Standard applications received would have been Standard under the P363/4 solution. This would have led to a saving of between £13,400 and £20,100 for ELEXON alone.

Indicative industry costs of P363/4

We do not expect P363/4 to adversely impact industry participants, but we seek clarification of this via this consultation.

We would like to understand how simplifying the registration process may have a positive impact and would welcome feedback as to the savings that may be achieved.

P363/4 impacts

Impact on BSC Parties and Party Agents	
Party/Party Agent	Impact
Generators	Reduces the time for registration of BM Units
Suppliers	Reduces the time for registration of BM Units where Suppliers are registering on behalf of Generators

© ELEXON Limited 2019

Impact on Transmission Company
NETSO will not be directly impacted by this Modification other than needing to be aware of the changes to the BSC in regards to how BM Units are registered. There will be no change to the timescales to raise objections to BM Unit registration laid down in BSCP15

Impact on BSCCo	
Area of ELEXON	Impact
Settlement Operations	ELEXON will be mostly impacted by internal procedure documents and educating staff on the new criteria and Standard configurations

Impact on BSC Systems and process	
BSC System/Process	Impact
New Customer Service platform	Electronic equivalent of BSCP15 forms will ned to be updated.

Impact on BSC Agent/service provider contractual arrangements	
BSC Agent/service provider contract	Impact
Central Registration Agent	Will need to be aware of changes to the BSC and CSDs when processing applications for registration. ELEXON will liaise with the CRA to ensure they are aware of the changes

Impact on Code	
Code Section	Impact
BSC Section K	Update to reflect new criteria for BM Unit registration and new configurations deemed to meet the criteria to be a BM Unit. Add caveats and exemptions as described above

Impact on Code Subsidiary Documents	
CSD	Impact
BSCP15	Amend to reflect changes required to deliver the P363/4 solution
BSCP68	Amend to reflect changes required to deliver the P363/4 solution

© ELEXON Limited 2019

Impact on other Configurable Items	
Configurable Item	Impact
BM Units Guidance Document	Updated to reflect changes to designation and issues processes.
Registration of BM Units relating to Generating Plant in the CVA Market Guidance Document	Updated to reflect changes to designation and issues processes.

Impact on Core Industry Documents and other documents	
Document	Impact
All	none

Impact on a Significant Code Review (SCR) or other significant industry change projects
Ofgem determined that P363 and P364 are SCR exempt when they were raised.

Impact on Consumers
The Workgroup has not identified any material and direct impacts on consumers.

Impact on the Environment
The Workgroup has not identified any material and direct impacts on the environment.

Assessment Consultation Questions
Will the implementation of P363/4 impact your organisation? *If 'Yes', please provide a description of the impact(s) and any activities which you will need to undertake, including any necessary changes to your systems, documents and processes. Please provide details of any on-going operational impacts (post-implementation).*
Will your organisation incur any costs in implementing P363/4? *If 'Yes', please provide details of these costs, how they arise and whether they are one-off or on-going costs.*
How long (from the point of Panel approval) would you need to implement P363/4? *Please provide an explanation of your required lead time, and which of the activities are the key drivers behind the timescale.*
The Workgroup invites you to give your views using the response form in Attachment D

© ELEXON Limited 2019

5 Implementation

Recommended Implementation Date

The Workgroup recommends an Implementation Date for P363/4 of:

- 27 June 2019 as part of the June 2019 BSC Release.

Assessment Consultation Questions
Do you agree with the proposed Implementation of P363/4? *If not, please provide reasons why and when you would prefer implementation to be?*
The Workgroup invites you to give your views using the response form in Attachment D

© ELEXON Limited 2019

Proposed configurations to be included in BSC Section K3.1.4

The Combination of Generating Units connected to the Distribution System at a single Boundary Point, where all units are controlled as one.

The Workgroup (WG) discussed this potential configuration and decided it should become a standard BM Unit. The basis for their recommendation is that there is no reason why this should not be a Standard BM Unit. Size limits were discussed as was controllability and the ability to dispatch. It was noted that if there are any concerns then BSCP15 already allows NETSO to raise objections.

In practice, if NETSO objected, ELEXON would liaise with the applicant to resolve the matter to a position where NETSO will not raise any further objections. Considering this, the WG is happy that there are sufficient measures in place to allow for this configuration.

This was covered by the criteria proposed for BSC Section K3.1.2 as the P363/4 solution was developed. As such, it is only recommended for P363.

Offshore PPMs or Combined Offshore BM Units (COBMU) including any related onshore and/or offshore Plant and Apparatus which are supplied at low voltage (LV) and which are connected at different Boundary Point(s) to the PPM or COBMU

The WG discussed this potential configuration and decided it should become a standard BM Unit. The WG considered whether or not there should be a limit on demand. However, it was agreed that this wasn't necessary as the equipment connected will be agreed in the Party's contract with NETSO.

The WG discussed whether the same approach should apply to LV assets connected to Plant and Apparatus that are entirely connected and operated ashore. They couldn't think of any scenarios where this could occur; so didn't think it should be a Standard BM Unit.

Discounted potential Standard BM Unit configurations

Two or more onshore PPMs that are controlled as a single entity with the express agreement of NETSO

This configuration is rarely seen and presents several potential issues. The main concern is if NETSO would be able to exercise effective control when dispatching. Close attention would also need to be given to the Metering configuration to ensure Settlement integrity. NETSO indicated that this is not an optimum configuration from their point of view. Applications for this type of configuration have been agreed in the past but their preference would be that PPMs were not designed with this configuration.

Given the rarity of applications, control concerns (but acknowledging that NETSO would have the ability to veto) and the requirement for extra scrutiny, it was decided not to recommend adding this configuration to the list of Standard BM Units.

© ELEXON Limited 2019

Two or more Generating Units previously part of a CCGT that are now OCGT

In 2017 two CCGTs converted to OCGTs and requested non-standard BM Units to keep their single BM Unit status. We are not aware of any other imminent conversions. NETSO indicated that they were unlikely to agree to new OGCTs being a single BM Unit as they may want to instruct each unit separately. Allowing converted OCGTs to be single BM Units could, potentially, lead to unfair advantages for converted units.

The WG recommended that CCGT to OCGT conversions such should remain as Non-Standard BM Units, allowing NETSO and the ISG to carefully review any applications under the Non-Standard BM Units process.

Electricity storage modules

There was initial keenness to create a Standard BM Unit configuration for electricity storage modules as the rise in the use of storage is expected to continue to increase.

Work is being undertaken as part of Grid Code's GC0096 'Energy Storage' to define the different parts of storage, and it was agreed to see if GC0096 would be able to help in terms of setting precedence and/or consistency of approach. However, as the Assessment Phase progressed, and the creation of BM Unit criteria was discussed, it was decided not to develop a Standard BM Unit configuration for storage. The reasons for this are:

- Any anticipated electricity storage configurations should be able to meet the BM Unit criteria[11];
- Given the ongoing GC0096 work, it wouldn't be appropriate to create an electricity storage Standard BM Unit until electricity storage definitions are agreed; and
- GC0096 has discussed adding electricity storage to the PPM definition. If this goes ahead, no BSC changes will be required PPM is already a Standard BM Unit.

It was agreed that if, following GC0096, there was a need to create a Standard BM Unit for storage it would be better to consider then and not as part of P363.

Generic Non-Standard process

The WG discussed introducing a generic Non-Standard process. This would allow Non-Standard BM Units approved repeatedly by the ISG to become Standard BM Units. The WG was concerned that if this were to be introduced, it could be a means of introducing Standard BM Units by a 'back-door' and leave two ways for Standard BM Units to be defined. It would negate the requirement to consult with Industry as well as carry out other 'checks and balances'. There was no suggestion of potential impropriety on the part of any entity. The concern however, is that while the potential of something slipping through is low, the impact could be quite high.

It was recommended that there is no need for a generic Non-Standard process and any new standard configurations should be considered through the Modifications process.

[11] One WG member is heavily involved in electricity storage development and was able to offer the Proposer and Workgroup deep expertise.

© ELEXON Limited 2019

Registration of Import and Export BM Units for the same Plant and Apparatus

The WG agreed that a Non-Standard BM Unit should not be required where there is more than one person responsible for the Plant and Apparatus at a single CVA Boundary Point, where the Plant and Apparatus is of a standard configuration (BSC Section K3.1.5 (d)).

Unchanged areas of BSC Section K3.1

Offshore PPM

The WG considered if BSC Sections K3.1.4 A-D[12] remain fit for purpose in light of the new criteria proposed for BSC Section K3.1.2. Offshore PPMs are unique in how they operate (due to their ability to be in 'Switching Groups'). Adapting BSC Section K3.1.2 to allow for Switching Groups for Offshore PPMs would involve replicating swathes of the existing BSC Sections K3.1.4A-D for no additional benefit. For these reasons it was felt that these four paragraphs should remain as they are.

Secretary of State controlled paragraphs

BSC Section F1.1.9 states that BSC Sections K3.1.2A, K3.1.8 and K3.3.12 to K3.3.14 cannot be changed without the Secretary of State's approval. These provisions cover the BM Unit registration requirements for Energy Intensive Industries (EII), Contracts for Difference (CfD) Assets and Capacity Market (CM) Assets. These are outside of the P363 and P364 scopes, so have not been considered for Modification.

There was also discussion about how Section K3.1.2 is contradictory to Section K3.1.8 and how CM Units are configured. An action was taken for ELEXON to look into CM Units, Section K3.1.2 and Section K3.1.8. ELEXON reported that while there is a potential issue with how the BSC and the CM rules overlap, it is out of the scope of P363 and P364. However, ELEXON would be happy to discuss this further with any Party if required.

Other parts of BSC Section K3.1

BSC Sections K3.1.5 and K3.1.6 deal with the Non-Standard BM Unit approval process. It was recommended that they should be kept to allow Parties to appeal against a decision not to register a BM Unit.

Section K3.1.7 requires BSCCo to keep a copy of all determinations made by the ISG. It was agreed to keep this.

Development of BM Unit criteria

At the first WG meeting the WG discussed why there is a list of criteria for BM Units in K3.1.2 and then a list of BM Units deemed to meet these criteria in BSC Section K3.1.4 that takes precedence over BSC Section K3.1.2. One of the WG members believed that BSC Section K3.1.4 was written as part of the original BSC to reflect licence conditions.

The WG proposed that BSC Section K3.1.4 would not be required if BM Units could be judged against the criteria in BSC Section K3.1.2. The WG agreed to consider amending and adding to the criteria in BSC Section K3.1.2, with a view to removing BSC Section

[12] Introduced by Modification P240 'Switching Plant and Apparatus between BM Units', to allow for switching between BM Units within operational timescales.

© ELEXON Limited 2019

K3.1.4. It was agreed that BSC Section K3.1.2 should make it clear that to remain a BM Unit, meeting certain criteria and conditions of registration should be continuous, even if changes are made on site[13].

The Proposer and the WG identified those characteristics of a BM Unit that make it a BM Unit. In doing so they considered the fundamentals of what a BM Unit 'does' and is used for. Using BSC Section K3.1.2 as a starting point, they then looked at the configurations in BSC Section K3.1.4 and the configurations proposed for P363 and broke the configurations down into their component parts. Following this exercise the WG re-assembled the components into a list of criteria that describe almost all BM Unit configurations. This list of revised criteria was then refined, adapted and tested over successive meetings into a list of five criteria that describes almost all BM Unit types. The iterations of the criteria are explained below and captured as a summary table in Appendix three.

First iteration of BM Unit criteria

The first iteration of BM Unit criteria put forward at meeting two were:

1. Only one Party is responsible for the Exports and/or Imports from or to the Plant and/or Apparatus which is comprised in the BM Unit;

2. The Exports and/or Imports of electricity from and to the Plant and/or Apparatus comprised in the BM Unit are capable of being controlled independently of the Exports or Imports of electricity from or to any Plant or Apparatus which is not comprised in the BM Unit;

3. On the basis of:

    a. the provisions of the Code as to Volume Allocation, and any options or entitlements which the responsible Party has exercised or intends to exercise pursuant to those provisions, and

    b. the Metering Equipment which is or is to be installed pursuant to Section L

    the quantities (in aggregate) of electricity Exported and Imported in each Settlement Period from or to the Plant and Apparatus comprised in the BM Unit are or will be determined (in accordance with the provisions of the Code as to Volume Allocation), and submitted to the SAA for the purposes of Settlement separately from any quantities Exported or Imported from or to any Plant, and Apparatus which is not comprised in the BM Unit;

4. A BM Unit may comprise Plant and Apparatus whose Imports and Exports are measured by Metering System so long as the energy flow is only measured by one Metering System for any given moment; and

5. The Lead Party of the BM Unit has entered into appropriate Connection Agreements in order to connect to the Total System. This includes, where appropriate, the configuration is approved by the appropriate System Operator(s).

[13] This was discussed at the first WG meeting but was later put forward as a separate part of Section K3.1 as the criteria were developed

© ELEXON Limited 2019

Criterion one

The reason why this was suggested is that one of the fundamental building blocks of the BSC is that flow is attributable to a single Party. No one objected to this principle and all agreed with the reasons for why it was suggested.

Criterion two

This is a NETSO requirement so that they are able to control the dispatch of individual BM Units. The suggestion removes the carve-out for Teleswitch Groups as it was felt that these are a unique set of BM Units and should not be included in generic criteria. The WG agreed, in theory, but thought this should be subject to consultation.

Discussions were held around the controllability of BM Units in relation to allowing Import and Export to be registered as separate BM Units, which is currently allowable where the Import and Exports are registered by different BSC Parties (BSC Section K3.1.3). The WG felt that there was no issue with this if the Import and Export are independently controllable, but felt that where this is not the case, it could cause issues for NETSO.

It was discussed that it was seen not so much to be the BM Unit that is independent, but the Plant and Apparatus. It was noted that a key aspect to this criteria is ensuring NETSO can manage the net flow onto the Total System and the importance of finding the correct balance between theory and the real world to ensure that the BSC does not inhibit development. It was noted that any new configuration needs NETSO's approval, as they must be able to control and dispatch.

Criterion three

This was suggested as the flow of electricity needs to be accounted for accurately and is a fundamental building block of Settlement. This is the same wording as the existing BSC Section K3.1.2(c) as it was felt that this already sums up the requirement, so does not need to change. The WG agreed that this wording is kept, with no amendments needed.

Criterion four

The basis for this is that flow can be accounted for in either CVA or SVA but not both at the same time but, consideration should be given to auxiliary Supply.

There was a concern that if the Plant and Apparatus in the BM Unit is allowed to be measured by both SVA and CVA Metering systems, where the CVA connection was to the Transmission System, you could end up with a flow of electricity from the Transmission System to a Distribution System without going through a GSP. The WG also discussed storage and the fact that whilst generators may have auxiliary Supply measured by SVA Metering Systems, storage units could Import considerably more to charge their batteries. Key points noted for consideration were potential gaming (e.g. taking imports through the SVA Meter if cheaper than CVA Meter, then exporting through the CVA Meter) and ensuring controllability.

The discussion ended noting there are several points to consider with regards to this principle which should be taken away, and revisited at the next meeting.

© ELEXON Limited 2019

Criterion five

BSC Section K3.1.2(e) states: 'There are no smaller aggregations of the Plant and Apparatus comprised in the BM Unit, for each of which the conditions in paragraphs (a), (b) and (c) would be satisfied.'

It was suggested that this be removed as the WG discussed in the first WG meeting that there shouldn't be a restriction on aggregation. Replacement text was put forward on the basis that there are other controls elsewhere in Industry that replicate some of the BSC's obligations and functions.

The WG felt that there are a number of configurations for which BSC Section K3.1.2 (e) is no longer relevant (e.g. PPMs) which have been a Standard BM Unit for some time. The WG felt that this criterion is more about how the group of Plant and Apparatus was controlled, i.e. there could be smaller aggregations of Plant and Apparatus for which the paragraphs (a) – (c) would be satisfied but, overall the Plant and Apparatus is controlled as one. It was decided by the WG that this principle should be removed.

With regards to the replacement wording, the WG spoke about the interaction between ELEXON and NETSO, as there is a requirement in BSCP15 to send applications to NETSO. The WG questioned if this needs to be in Section BSC Section K3.2 at Code level rather than in a BSCP.

Second iteration of BM Unit criteria

At the third WG meeting the WG discussed criteria four in more detail.

BM Unit Criteria four

The second iteration of criteria four was:

- The Export from Plant and Apparatus must be registered in CVA.
- Notwithstanding requirements elsewhere in Section K, The Import to Plant and Apparatus is capable of being measured by metering systems registered in CVA and SVA, but shall only be measured by either the SVA or the CVA Metering Systems at any moment.
- Where Plant and Apparatus is connected to both a Distribution System and the Transmission System, the configuration should be such that the Plant and Apparatus cannot be deemed to meet the criteria of being a GSP. There should be measures in place to prevent instantaneous through flow from the Distribution System to the Transmission System or vice versa.
- Where Plant and Apparatus is connected to more than one point in a Distribution system the configuration should be such that the Plant and Apparatus cannot be deemed to meet the criteria of being a DSCP.

It was agreed by the WG that BSC Section K3.1 should have a cross reference to K3.3 regarding the requirements for registering Imports or Imports and Exports in SVA[14].

It was agreed that while the flow of electricity won't necessarily net for individual accounts, where Import is connected to the Distribution System through one Meter (registered in SVA) and Export is connected to the Transmission System through another

[14] This was not incorporated into the Legal text as existing provisions within the BSC already allow for this

© ELEXON Limited 2019

Meter (registered in CVA), it will net overall for Settlement purposes, meaning that so long as flow is metered, there will be no issue.

There may be scenarios where a site may still Import from SVA while Generating. An example of this would be where the electricity generated is not used on-site, so Imports from SVA for domestic services. In these scenarios there should be interlocks in place to prevent through flow. However, as above, as long as this is metered and interlocks prevent through flow, there will be no Settlement implications.

In terms of having Connection Agreements to the Transmission and Distribution Systems it was agreed that there are scenarios where this may occur for electricity storage. However, it is not economically viable at this time to switch between the two (e.g. Export to one or the other), but may be at some point in the future.

Through flow between Systems should not be allowed, but we should not prevent the ability to choose between which System to Export to so long as correct Metering (and where appropriate, aggregation) is in place. However, a single Generator being able to Export to both Systems at the same time should not be allowed. This is for engineering reasons as the electricity will take the path of least resistance and could, as likely, flow form Transmission to Distribution (or vice versa) via the Generating Unit rather than from the unit to either System.

An example of through flow via the Generation Unit is connected to two Systems simultaneously

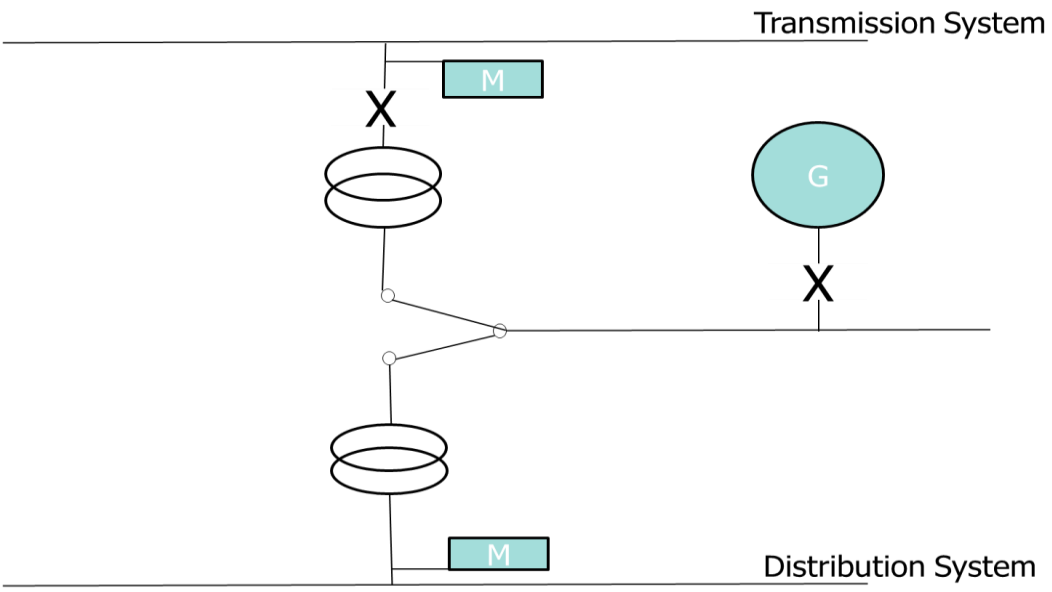

For Settlement, if the same BM Unit is capable of Exporting to both Systems, a BM Unit will be needed for each. The Transmission will be CVA and the Distribution will likely be a Supplier BM Unit, but could be CVA.

The following table shows how BM units can register in CVA and SVA.

Export	Import	Permitted?
CVA	CVA	Yes
SVA	SVA	Yes
CVA	SVA	Yes
SVA	CVA	Yes – with ISG approval[15]

[15] This option had never been used at the time of publishing

© ELEXON Limited 2019

NETSO expressed control and System management concerns when Exporting to Transmission and Distribution at different points in a Settlement Period. It was therefore agreed that this should not be permitted.

The potential for estimated Meter reading fraud was discussed. It was agreed that there are measures in place to prevent and discourage this, but we should be mindful.

Whilst the wording of the criteria was agreed at the time, there was some feeling that the wording could still be tweaked but none of those present were sure how best to proceed at that time.

Third iteration of BM Unit criteria

The criteria presented at the fourth WG meeting had expanded to eleven criteria, although some of these are essentially the same criteria but split into separate criteria for Import and Export. This was done for ease of discussion and drafting of Business Requirements and draft legal text

1. Import to a BM Unit should be attributable to only one Party
2. Export from a BM Unit should be attributable to only one Party
3. The Import to a BM Unit is capable of being accounted for in Settlement separate to the Import or Export from another BM Unit
4. The Export from a BM Unit is capable of being accounted for in Settlement separate to the Import or Export from another BM Unit
5. Import to Plant and Apparatus Can only be in one BM Unit at a time
6. Export from Plant and Apparatus Can only be in one BM Unit at a time
7. The Export from Plant and Apparatus must be measured by Metering Systems registered in CVA
8. Notwithstanding requirements elsewhere in Section K, The Import to Plant and Apparatus is capable of being measured by metering systems registered in CVA and SVA, but shall only be measured by either the SVA or the CVA metering systems at any moment
9. Where Plant and Apparatus is connected to both a Distribution System and the Transmission System, the configuration should be such that the Plant and Apparatus cannot be deemed to meet the criteria of being a GSP
    a. There should be measures in place to prevent instantaneous through flow from the Distribution System to the Transmission System or vice versa
    b. There should be measures in place to prevent Export onto the Transmission System and Distribution System within the same Settlement Period
    c. The Export to the Transmission System and Distribution System should be registered as separate BM Units
10. Where Plant and Apparatus is connected to more than one point in a Distribution System, the configuration should be such that the Plant and Apparatus cannot be

© ELEXON Limited 2019

deemed to meet the criteria of being a Distribution System Connection Point (DSCP)

11. At any point in time, The Exports and/or Imports to a Plant and/or Apparatus in a BM Unit must be controlled independently, and measured independently, of the Exports or Imports from or to the Plant or Apparatus in that BM Unit which are also associated with another BM Unit

Business Requirements and draft proposed Legal Text

ELEXON drafted business requirements (BRs) and presented them, along with the first version of proposed draft legal text at WG meeting four. The first set of draft BRs and legal text were based on the third iteration of BM Unit criteria (see above).

SVA and CVA interaction

NETSO requested between meetings that a BR be added so that BM Units could not Import from SVA and Export to CVA within the same Settlement Period. This would allow NETSO some level of control of the Total System.

The WG discussed how you could Export and Import from one System to another using the same BM Unit, as it would be associated with two different places. The WG discussed at length what would happen if Meters are connected to different Systems in CVA or SVA.

One member highlighted that, in their opinion, it is important to prevent Importing and Exporting within the Settlement Period and that, in their opinion, the BSC legal text should be drafted in such a way that storage cannot take advantage of this.

NETSO and ELEXON interaction

One of the BRs required ELEXON to share all BM Unit registration applications with NETSO, unless NETSO requests not to see a particular set of applications, as agreed between NETSO and ELEXON. The BR went on to say that where NETSO indicates they will not approve the BM Unit registration pursuant to the Grid Code, the BM Unit must not be registered pursuant to the BSC.

One WG member raised concerns that NETSO may have too much of a say on BM Unit configurations. WG members were asked if ELEXON should tell industry when NETSO doesn't approve a certain BM Unit configuration. WG members discussed potential outcomes that would see NETSO reject a configuration. It was pointed out that this particular BR just fleshed out current practise. BSCP15 requires ELEXON to share all applications for BM Unit registration with NETSO and there are agreements in place as to what is required to be seen and what is not[16]. The WG were assured that if NETSO raise any concerns then ELEXON will liaise with the applicant informally to allow them to modify their application to achieve accreditation. Similarly, ELEXON liaises with potential applicants prior to formal submissions being made to mitigate risk of rejection based on experience. This abated the WG's concerns and this BR was kept as is. It was noted that in respect of Non-Standard BM Units, BSC Sections K3.1.6 states the final decision on approval comes from the ISG but they are required to consult NETSO. ELEXON pointed out

[16] As an example, NETSO see a lot more detail about Non-Standard applications than Standard

© ELEXON Limited 2019

that the current position does not provide a veto to NETSO but, purely consultation rights and that situation would be maintained.

Potential Issue 70 overlap

Several WG members raised the possibility that some of the draft BRs could cause a crossover between P363/4 and Issue 70 'Settlement of Secondary BM Units using metering at the asset'. One of the potential crossovers was that, due to operational metering needing to have ability to be dispatch-able, there could be different types of BM Units introduced which may necessitate further changes to the BM Unit criteria.

It was agreed to investigate this prior to proceeding with the P363/4 solution. This was done between WG meetings by the P363 Lead Analyst and Subject Matter Expert attending the Issue 70 WG meeting, discussing with their Issue 70 opposite numbers and following up ex-committee with WG members. The conclusion is that there is no overlap.

Other points of discussion

A WG member asked if we need to take into consideration the potential Modification on ELEXON's white paper on multiple providers that was recently published. ELEXON noted we would look into the possibility to draft in such a way that it was consistent with the white paper, and that we would not be in favour of putting both Modifications on hold due to what may or may not be raised from a Change perspective.

One member focused on the physical connection issue, of having two connections to both Systems and how that can impact Settlement if exporting to CVA and importing from SVA and suggested that rules should be established to prevent Parties from being able to do this. Due to waiting on GC0096 (see above), it was noted that it is difficult to carve anything out for this and that nothing should be added to the legal text or BRs.

Workgroup meeting five

Proposed solution

Having discussed only having criteria in BSC Section K3.1.2 at length, and not being able to reach a satisfactory conclusion that meets all of the concerns the Proposer opted to take the 'middle ground'. It was put forward for discussion that an application for BM Unit registration will be approved if the applicant can show that their proposed configuration is **EITHER** one of the designated configurations in BSC Section K3.1.4 **OR** meets the criteria in BSC Section K3.1.2.

Fourth iteration of BM Unit criteria

Based on the changed proposed P363/4 solution the fourth iteration of BM Unit criteria was presented to the WG:

1. Only one Party is responsible for the Exports and / or Imports from or to the Plant and / or Apparatus comprised in the BM Unit.
2. The Exports and/or Imports to a Plant and/or Apparatus in a BM Unit must be controlled independently of the Exports or Imports from or to the Plant or Apparatus not included in that BM Unit.

© ELEXON Limited 2019

3. Import to and/ or Export from a BM Unit is capable of being accounted for in Settlement and measured by Metering Systems registered in CVA separate from anything that is not included in the BM Unit.

4. The BM Unit does not comprise plant and Apparatus whose Imports and Exports are measured by both CVA MS and SVA Metering Systems subject to criteria five[17].

5. The imports to auxiliary assets may be registered by both CVA MS and SVA Metering Systems where:

    a. the SVA registered connection is less than [415V/1kV]

    b. There are measures in place to prevent instantaneous through flow from the CVA registered connection to the SVA registered connection

6. There are no smaller aggregations of plant and apparatus comprised in the BM Unit that are independently controllable, however aggregation of smaller controllable plant and apparatus is allowable up to the size of a [Small Power Station/50MW/License exempt].

7. Subject to BSC Sections K3.1.4B, K3.1.4C and criteria five, the same Plant and Apparatus may be comprised in more than one BM Unit only to the extent that different persons are responsible for the Exports from and Imports to such Plant and Apparatus.

Criterion two

It was discussed that the wording around 'independently controlled' needs to be tightened up in the draft legal text in order to make it clear what 'independently controlled' means.

Criterion five

The de Minimis amount for auxiliary SVA Supply was discussed and recent figures provided for context. Since March 2017 ELEXON has registered five directly controlled windfarms in Scotland[18] and three embedded batteries with auxiliary Supply. NETSO suggested that the size of auxiliary SVA Supply could be given in relation to the size of the Plant.

ELEXON has looked at the above examples. One of them has a back-up supply at 415V, the rest at 400V. The proposal is therefore to give a maximum size of 415V or use 1kV as this is the definition of LVused elsewhere (see above). It was agreed that 1kV would be preferable, but this would be confirmed as part of the consultation.

Criterion six

NETSO requested that this is considered as a principle as it felt that removing it completely could lead to the aggregation of large generating units which wouldn't necessarily fit with their requirements.

NETSO noted that the Grid Code relies on the BSC to set out appropriate configurations of BM Units for balancing purposes. Large scale aggregation would make balancing difficult

[17] Criteria four and five were amalgamated in the P363/4 proposal for ease of legal text drafting
[18] Note that the Grid Codes prevents this arrangement for Directly connected sites in England and Wales

© ELEXON Limited 2019

but, like with P344 'Project TERRE', small scale aggregation is manageable form a Grid perspective.

NETSO suggested aggregation to the size of a Small Power Station (as defined in the Grid Code). This means up to 50MW in England and Wales, 30MW in South Scotland and 10MW in North Scotland. All current multi-unit generators and storage are less than 50MW. All bar one is in England and Wales. The other is in South Scotland and is less than 30MW.

ELEXON understood that at the time of the meeting there are discussions around raising a Grid Code Modification to change the definition of Small Power Station to be less than 10MW across GB, and so an actual figure of 50MW or reference to licensable status (as suggested by one of the respondents to the consultation of the review of BM Units that lead to this Modification) may be more appropriate. It was suggested that in the interests of future proofing, the BSC should refer to Small Power Station rather than a specific level.

Criterion seven

Principle seven looks to move the sentiment of BSC Section K3.1.3 into K3.1.2. It was discussed if this is still required in light of P344 but, it was pointed out that P363/4 is concerned with Primary BM Units and the purpose of principle seven would allow for the Import and Export to be in separate Primary BM Units. This is allowed at present if the Registrants of the Import and Export are different or for a single registrant if the import is SVA and the Export is CVA. A single Registrant is not allowed to register two separate BM units for Import and Export in CVA.

This would cause significant issue for NETSO in terms of Balancing as they would not have a single 'control point'. They would need to have a process where-by if they instructed the Import BM Unit to reduce they would also need to ensure the Export BM Unit does not increase and vice versa. This would be complicated and time consuming.

When ELEXON have had enquires about registering separate Import and Export BM Units in the past, we have had to tell Parties that this is not allowable under the Code. Some Parties have got round this restriction by registering the Imports in the SVA and the Exports in CVA. The reason that Parties want to register separate Import and Export BM Units seems to be to allow them to set up separate Metered Volume Reallocation Notices (MVRNs) for Import and Export. The way the BSC is set up means that MVRNs have to be set up at a BM Unit level.

The WG felt that allowing separate BM Units for Import and Export to solve what is really a system issue around the MVRN process was not the best solution given NETSO's concerns. Instead, it was agreed that this should be raised as a separate Issue should any Party feel that it is required. Principle 7 was therefore removed from the principles.

BM Unit configuration configurations in BSC Section K3.1.4

The Proposer proposed configurations that would extend the list of deemed BM Unit configurations in BSC Section K3.1.4 and would add the following configurations:

a) An offshore PPM plus Low Voltage Assets related to that PPM at separate Transmission System Boundary Point(s).

b) A Combined Offshore BM Unit plus Low Voltage Assets related to that Combined Offshore BM Unit at separate Transmission System Boundary Point(s).

© ELEXON Limited 2019

c) Two or more Low Voltage Assets at separate Transmission System Boundary Points relating to a Offshore PPMs or Combined Offshore BM Units at the same project smaller than or equal to the equivalent Export for a [Small Power Station].

The use of the phrase 'LV assets' was discussed. If 'LV' is used then it would be necessary to determine what is meant by 'LV' or designate a de Minimis level. Given this consideration it was agreed that 'LV' should not be used, instead 'import/export' should be used. Furthermore, it was discussed that the configuration in C meets the proposed principles in K3.1.2 and as such does not need to be designated in K3.1.4 and as such shall be removed from the list.

Matrix of BM Unit configurations

ELEXON shared a matrix (Appendix 2) comparing all known and expected configurations of Plant and Apparatus compared with the proposed criteria and configurations for BSC Section K3.1.2 and BSC Section K3.1.4. There are very few configurations that would still be Non-Standard and, of those that will be Non-Standard, ELEXON has received very few applications and the WG discussed and agreed that these should not become Standard configurations. It is not possible to determine that this trend will continue, but it is expected to do so.

It was discussed that introducing the new criteria would likely not lead to extra work for ELEXON or the Applicant. At the moment the Applicant is required to state which clause of BSC Section K3.1.4 the BM Unit configuration meets, or alternately apply for a Non-Standard BM unit explaining how the configuration best meets the requirements of BSC Section K3.1.2. The P363/4 solution will require the Applicant to state which clause of BSC Section K3.1.4 the BM Unit configuration meets, explain how the configuration meets the requirements of BSC Section K3.1.2 or apply for a Non-Standard BM unit. BSCP15 will be amended to ask questions in the application form to make the application for standard BM Units easy. The key time saving will be the process being 30 days shorter as there will be no need to go through the ISG process and no need to complete the Non-Standard BM Unit form for most configurations.

Business Requirements

The WG did not 'line-by-line' the second version of the draft BRs but discussed by exemption. It was explained that the purpose of the BRs is not to be the final wording of the BSC but to capture the elements of the proposed solution so that they can be changed into legal text. The points raised by the WG for amendment of the BRs were:

- Application form should identify any LV assets (whether 415V or 1kV);
- Any interconnection agreements should be identified;
- All interlocking arrangements should be identified at the application stage;
- 'Independent controllability' needs to be explained clearly i.e. it should:
    - Be able of being controlled independently of any other load;
    - The Plant and Apparatus should be able to be controlled independent of any other Plant and Apparatus; and

© ELEXON Limited 2019

- Individual assets within the BM unit may be controlled independently of each other but when operating as part of a BM Unit should only be controllable as part of that BM unit.

On the basis that the above would be included, the WG agreed the proposed business requirements. The final draft BRs are in Attachment E.

Amalgamation of Modifications

The P363/4 combined solution was developed as we couldn't identify an efficient way to do P363 and P364 alongside each other without some overlap. It was discussed that the P363 and P364 solutions will only move the BSC forward so far, which is why the WG developed the P363/4 combined solution as an attempt to future proof the BSC.

There was some concern that removing BSC Section K3.1.4 and relying on a principles based approach by expanding K3.1.2 as the P363/4 solution would be too much of a change. The WG thought there may merit in doing some of P363, some of P364 and some of the P363/4 solution that wouldn't completely involve re-writing section BSC Section K3.1.

The solutions for P363 AND P364 were developed and agreed upon in WG meeting one. Subsequent WG meetings were to discuss the combined P363/4 solution. It was agreed in principle at WG meeting three that the two Modifications should be amalgamated (for the reasons given in section three) subject to the WG being happy with the combined P363/4 solution. Because the WG couldn't find a way of moving BM Unit registration into a principals' based approach only, the Proposer amended the combined solution to that described in section three. As this is the proposed solution, and there WG does not believe there are any better alternatives, they recommended at WG meeting five that P363 and P364 should be amalgamated into a single Modification, which should be P364.

Workgroup meeting six

Workgroup meeting six was a teleconference[19] to approve the proposed draft legal text. None of the WG members raised any suggestions or concerns.

[19] One WG member attended in person as they were in London for another meeting earlier that day.

© ELEXON Limited 2019

7 Workgroup's Initial Conclusions

Applicable BSC Objectives

At this stage, the combined P363/4 Workgroup believes that combined P363/4 solution would better facilitate the Applicable BSC Objectives and so **should be approved**.

The WG Initial Conclusions are based on the P363/4 combined solution which is the Proposed Solution. Opinions were not sought on P363 or P364 separately as they are not being proposed for implementation at this time.

Applicable BSC Objective (c):

The **majority** of the WG believe that P363/4 **would better facilitate** Applicable BSC Objective (c) as it removes perceived differences between traditional Plant and Apparatus and non-traditional innovative Plant and Apparatus. The change therefore breaks down a perceived barrier to entry by levelling the playing field and improving speed and efficiency of BM Unit registration.

Allowing separate BM Units to be registered by the same Party for the Import to and Export from the same Plant and Apparatus would remove the inconsistency between how BM Units can be registered depending on whether the same or different Parties are registering them, therefore levelling the playing field and promoting competition.

One WG member however, was neutral in their view. Their reason for this is that they do not believe there to be any concerns with the existing registration process in terms of competition and as such the BSC does not need to be updated. Because of this they believed while the P363/4 solution would not better facilitate Applicable Objective (c); it would not have a negative affect either.

Another WG member believed that an increase in the number of configurations to be included in BSC Section K3.1.2 would have a positive effect on competition they were not necessarily sure that the new registration process would be better. This means that were they asked their views for each Modification, they would have been positive for P363 and neutral for P364 in respect of BSC Applicable Objective (c).

Applicable BSC Objective (d):

The WG **unanimously** agreed that P363/4 **would better facilitate** Applicable BSC Objective (d). Adding to the list of Standard BM Units and introducing a generic non-standard BM Unit process removes a perceived barrier to entry for Parties employing new technologies or operational practices. This is due to a more protracted current registration process for non-Standard BM Units and a lack of certainty over whether BM Unit configurations will be accepted by the ISG.

Adding further information about applying for non-Standard BM Unit status when Plant and Apparatus is reconfigured helps to make the BSC requirements clear and reduce the risk of errors occurring. Simplifying the BM Unit registration process increases the efficiency of registration, and therefore removes potential barriers to entry. By reducing the workload of the ISG and ELEXON, it allows them to focus their efforts on increasing efficiency elsewhere and providing greater support to Parties.

© ELEXON Limited 2019

Applicable BSC Objectives (a), (b), (e), (f) and (g)

At this stage, all Workgroup Members believe that P363/4 is neutral against Applicable BSC Objectives (a), (b), (e), (f) and (g).

Does P363/4 better facilitate the Applicable BSC Objectives?		
Obj	Proposer's Views	Other Workgroup Members' Views[20]
(a)	• Neutral	• Neutral
(b)	• Neutral	• Neutral
(c)	• Positive –removes perceived differences between traditional Plant and Apparatus and non-traditional innovative Plant and Apparatus	• Majority Positive in agreement with the proposer • One neutral - the current process works so does not need to be changed • One positive for P363 but neutral for P364 as they were not sure if the new process would be any better
(d)	• Positive - Increases efficiency in the registration process and removes a lot of concern around whether the ISG will approve registration	• Positive – increases administrative efficiency of the Registration process
(e)	• Neutral	• Neutral
(f)	• Neutral	• Neutral
(g)	• Neutral	• Neutral

Assessment Consultation Question
Do you agree with the Workgroup's initial majority view that P363/4 does better facilitate the Applicable BSC Objectives than the current baseline and so should be approved? *If not, can you please explain what you think needs to be amended?*
The Workgroup invites you to give your views using the response form in Attachment D

What are the Applicable BSC Objectives?

(a) The efficient discharge by the Transmission Company of the obligations imposed upon it by the Transmission Licence

(b) The efficient, economic and co-ordinated operation of the National Electricity Transmission System

(c) Promoting effective competition in the generation and supply of electricity and (so far as consistent therewith) promoting such competition in the sale and purchase of electricity

(d) Promoting efficiency in the implementation of the balancing and settlement arrangements

(e) Compliance with the Electricity Regulation and any relevant legally binding decision of the European Commission and/or the Agency [for the Co-operation of Energy Regulators]

(f) Implementing and administrating the arrangements for the operation of contracts for difference and arrangements that facilitate the operation of a capacity market pursuant to EMR legislation

(g) Compliance with the Transmission Losses Principle

[20] Shows the different views expressed by the other Workgroup members – not all members necessarily agree with all of these views.

© ELEXON Limited 2019

Appendix 1: Workgroup Details

Workgroup's Terms of Reference for P363

Specific areas set by the BSC Panel in the P363 Terms of Reference
Consider the thresholds for the size of low voltage assets combined with PPMs and COBMUs?
Consider low voltage assets combined with other Generating Units?
Consider the combination of small Generating Units connected to the Transmission System
Consider the conversion of Closed Cylinder Gas Turbine to Open Cylinder Gas Turbine?
Consider recognising electricity storage as a standard BM Unit?
Consider the creation of Panel owned document listing standard configurations?
Are there any additional standard BM Units to be included?
What changes are needed to BSC documents, systems and processes to support P363 and what are the related costs and lead times?
Are there any Alternative Modifications?
Should P363 be progressed as a Self-Governance Modification?
Does P363 better facilitate the Applicable BSC Objectives than the current baseline?

Workgroup's Terms of Reference for P364

Specific areas set by the BSC Panel in the P364 Terms of Reference
What are the guiding principles for establishing BM Units for use in Settlement?
Are there any additional configurations of Plant and Apparatus or emerging business models that are (or are expected to be in the next five years) commonplace and might be prevented by the requirements in K3.1 or otherwise require non-standard configuration?
How might P364 affect the Transmission Company's obligation to manage the National Electricity Transmission System?
How might the proposed Modification affect the integrity of Settlement?
Are there any technical reasons why the proposed changes are not suitable i.e. they should remain prohibited or require ISG approval?
What are the circumstances in which technical changes may lead to a change in configuration?
Are there technical constraints within other Industry Codes or regulatory arrangements that ought to be considered?
What changes are needed to BSC documents, systems and processes to support P364 and what are the related costs and lead times?
Are there any Alternative Modifications?
Should P364 be progressed as a Self-Governance Modification?
Does P364 better facilitate the Applicable BSC Objectives than the current baseline?

© ELEXON Limited 2019

Assessment Procedure timetable

P364 Assessment Timetable	
Event	Date
Panel submits P363 and P364 to Assessment Procedure	14 Dec 17
Workgroup Meeting 1	5 Feb 18
Workgroup Meeting 2	5 Mar 18
Workgroup Meeting 3	1 May 18
Workgroup Meeting 4	18 Jun 18
Workgroup Meeting 5	10 Sep 18
Workgroup Meeting 6	20 Nov 18
Assessment Procedure Consultation	5 – 26 Feb 19
Workgroup Meeting 4	w/c 4 Mar 19
Panel considers Workgroup's Assessment Report	11 Apr 19

© ELEXON Limited 2019

Workgroup membership and attendance

Given the similarity between P363 and P364, it was agreed to hold joint Workgroup meetings.

P363 and P364 combined Workgroup Attendance							
Name	Organisation	5 Feb 18	5 Mar 18	1 May 18	18 Jun 18	10 Sep 18	22 Nov 18
Members							
Douglas Alexander	ELEXON (Chair)	✓	×	✓	×	×	×
Elliott Harper	ELEXON (Chair)	×	×	×	×	✓	×
Cal Lynn	ELEXON (P363 Lead Analyst)	✓	✓	✓	✓	×	×
Chris Wood	ELEXON (P364 Lead Analyst and Chair)	✓	✓	✓	✓	✓	✓
Graz McDonald	Green Frog *(Proposer)*	✓	☎	☎	☎	☎	☎
Andrew Colley	SSE	✓	☎	✓	☎	☎	☎
Bill Reed	RWE Npower	✓	✓	✓	✓	✓	✓
Gary Henderson	Everis Limited	✓	☎	✓	✓	✓	☎
Greg Heavens	NETSO	✓	✓	✓	✓	✓	☎
Helen Stack	Centrica	✓	✓	✓	☎	☎	☎
Lee Stone	E.On	✓	×	✓	×	☎	×
Lisa Waters	Waters Wye Associates	✓	✓	✓	✓	✓	☎
Rick Parfett	ADE Limited	×	✓	✓	✓	×	×
Rob Johnston	Smartest Energy	×	✓	✓	×	✓	☎
Thomas Webb	UKPR	×	×	×	×	☎	×
Attendees							
Jeremy Caplin	ELEXON (Design Authority)	✓	×	✓	✓	✓	✓
Nick Rubin	ELEXON (Design Authority)	✓	✓	✓	×	×	×
Aditi Tulpule	ELEXON (Lead Lawyer)	×	×	✓	✓	×	✓
Nick Brown	ELEXON (Lead Lawyer)	✓	✓	×	×	✓	×
Katie Wilkinson	ELEXON (Subject Matter Expert)	✓	✓	✓	✓	✓	✓
Helen Knowles	Smartest	✓	×	✓	×	✓	×
James Jackson	UK Power Reserve	✓	✓	×	☎	×	☎
Jonathan Ainley	Kiwi Power	×	×	×	☎	×	×
Michael Clark	Become Energy	✓	✓	×	×	✓	×
Ryan Goddard	Welsh Power	✓	✓	✓	☎	×	×

© ELEXON Limited 2019

Appendix 2: BM Unit registration post implementation

BM Unit Type compared to proposed criteria and configurations

BM Unit Type	1. One Party	2. Independent control	3. Measured separately	4. Not SVA and CVA except SVA LV back up	5. No Aggregation or Aggregation only to Small Power Station	Standard via K3.1.2	Standard via K3.1.4	Non-Standard
Generating Unit*	√	√	√	√	√	√		
CCGT Module*	√	√	√	√	X		√	
PPM (Medium or Large Generator)*	√	√	√	√	X		√	
PPM (Small Generator)*	√	√	√	√	√	√	√	
CVA registered Imports though the Station Transformers*	√	√	√	√	X if more than one		√	
Directly Connected Premises at one Boundary Point*	√	√	√	√	√	√	√	
Directly Connected Premises at more than one Boundary Point, Less than the size of a small Power Station[21]	√	√	√	√	X		√	
Directly Connected Premises at more than one Boundary Point more than the size of a Small Power Station[22]	√	√	√	√	X			√
Supplier BM Unit*	√	√	√	√	X		√	

* Currently Standard BM Units
[21] Currently Non-Standard and covered by K3.1.5

* Currently Standard BM Units
[22] Currently Non-Standard and covered by K3.1.5

© ELEXON Limited 2019

BM Unit Type	1. One Party	2. Independent control	3. Measured separately	4. Not SVA and CVA except SVA LV back up	5. No Aggregation or Aggregation only to Small Power Station	Standard via K3.1.2	Standard via K3.1.4	Non-Standard
Annex I-2 BETTA BM Units*	√	Various NS BM Units	√	√	X		√	
Interconnector BM Unit*	√	X[23]	X[24]	√	√		√	
COBMU*	√	√	√	√	X		√	
Import assets at Offshore PPMs combined with PPM/COBMU	√	√	√	√	X		√	
Reciprocating Generator (Small)	√	√	√	√	√	√		
Reciprocating Generator (Medium or Large)	√	√	√	√	X			√[25]
Electricity Storage Module (Small)	√	√	√	√	√	√		
Electricity Storage Module (Medium or Large)	√	√	√	√	X			√[26]
Hybrid Plant – PPM or Reciprocating Generator plus Storage Module (small)	√	√	√	√	√	√		
Hybrid Plant – PPM or Reciprocating Generator plus Storage Module (medium or large	√	√	√	√	X			√

[23] Interconnectors are controlled as a single entity
[24] Load measured across Interconnector and allocated separately
[25] All reciprocating generators so far have been small and NETSO would want to comment on any that were medium or large
[26] All electricity storage modules so far have been small and National Grid would want to comment or any that were medium or large as per BSCP15 Section 3 (see above). Note that this may become standard after GC0096 has concluded if electricity storage is brought into the definition of PPM.

© ELEXON Limited 2019

BM Unit Type	1. One Party	2. Independent control	3. Measured separately	4. Not SVA and CVA except SVA LV back up	5. No Aggregation or Aggregation only to Small Power Station	Standard via K3.1.2	Standard via K3.1.4	Non-Standard
Two or more onshore PPMs controlled as a single entity (Medium or Large)	√	√	√	√	X			√
OCGTs (including CCGT conversions)	√	√	√	√	X			√
SVA back-up assets <= [415V/1KV]	√	√	√	√	√	√		
SVA back-up assets >[415V/1kV]	√	√	√	x	X			√
Directly Connected Premises at more than one Boundary Point, less than the size of a Small Power Station	√	√	√	√	X		√[27]	
Offshore PPMs or COBMU supplied at low voltage and connected at different boundary points	√	√	√	√	X		√[28]	

[27] This is one of the new standard configurations proposed by P363/4 and P363
[28] This is one of the new standard configurations proposed by P363/4 and P363

© ELEXON Limited 2019

Appendix 3: BM Unit criteria development

The table below show the iterations of BM Unit criteria alongside each other. Not all of the wording is exactly the same as that in Section 6. The Section 6 is the wording used when discussing with the WG. The wording below has been changed to show the criteria's evolution. Where the text is grey, there has been no change in the criteria between iterations.

	Iteration one	Iteration two	Iteration three	Iteration four	Final draft
One	Only one Party is responsible for the Exports and/or Imports from or to the Plant and/or Apparatus which is comprised in the BM Unit;	Only one Party is responsible for the Exports and/or Imports from or to the Plant and/or Apparatus which is comprised in the BM Unit;	Import to a BM Unit should be attributable to only one Party Export from a BM Unit should be attributable to only one Party	Only one Party is responsible for the Exports and / or Imports from or to the Plant and / or Apparatus comprised in the BM Unit.	Only one Party is responsible for the Exports and/or Imports in the BM Unit (but subject to auxiliary/back-up Supply exemptions)
Two	The Exports and/or Imports of electricity from and to the BM Unit are capable of being controlled independently of other Exports and/or Imports for other BM Units	The Exports and/or Imports of electricity from and to the BM Unit are capable of being controlled independently of other Exports and/or Imports for other BM Units	At any point in time, The Exports and/or Imports to a Plant and/or Apparatus in a BM Unit must be controlled independently, and measured independently, of the Exports or Imports from or to the Plant or Apparatus in that BM Unit which are also associated with another BM Unit	The Exports and/or Imports of electricity from and to the BM Unit are capable of being controlled independently of other Exports and/or Imports for other BM Units	The Exports and/or Imports of electricity from and to the BM Unit are capable of being controlled independently of other Exports and/or Imports for other BM Units
Three	Quantities of electricity Exported and Imported from or to the BM Unit are or will be determined and submitted to the SAA separately from any quantities	Quantities of electricity Exported and Imported from or to the BM Unit are or will be determined and submitted to the SAA separately from any quantities Exported or Imported from or to any	Quantities of electricity Exported and Imported from or to the BM Unit are or will be determined and submitted to the SAA separately from any quantities Exported or Imported from or to any other BM Unit. This is on the basis of other obligations being met elsewhere within the Code;	Quantities of electricity Exported and Imported from or to the BM Unit are or will be determined and submitted to the SAA separately from any quantities	Quantities of electricity Exported and Imported from or to the BM Unit are or will be determined and submitted to the SAA separately from any quantities

© ELEXON Limited 2019

	Iteration one	Iteration two	Iteration three	Iteration four	Final draft
	Exported or Imported from or to any other BM Unit. This is on the basis of other obligations being met elsewhere within the Code;	other BM Unit. This is on the basis of other obligations being met elsewhere within the Code;		Exported or Imported from or to any other BM Unit. This is on the basis of other obligations being met elsewhere within the Code;	Exported or Imported from or to any other BM Unit. This is on the basis of other obligations being met elsewhere within the Code;
Four	A BM Unit may comprise Plant and Apparatus whose Imports and Exports are measured by Metering System so long as the energy flow is only measured by one Metering System for any given moment;	The Export from Plant and Apparatus must be registered in CVA. Notwithstanding requirements elsewhere in Section K, The Import to Plant and Apparatus is capable of being measured by metering systems registered in CVA and SVA, but shall only be measured by either the SVA or the CVA metering systems at any moment. Where Plant and Apparatus is connected to both a Distribution System and the Transmission System, the configuration should be such that the Plant and Apparatus cannot be deemed to	Import to Plant and Apparatus Can only be in one BM Unit at a time Export from Plant and Apparatus Can only be in one BM Unit at a time The Export from Plant and Apparatus must be measured by Metering Systems registered in CVA Notwithstanding requirements elsewhere in Section K, The Import to Plant and Apparatus is capable of being measured by metering systems registered in CVA and SVA, but shall only be measured by either the SVA or the CVA metering systems at any moment Where Plant and Apparatus is connected to both a Distribution System and the Transmission System, the configuration should be such that the Plant and Apparatus cannot be deemed to meet the criteria of being a GSP There should be measures in place to prevent instantaneous through flow	The BM Unit does not comprise plant and Apparatus whose Imports and Exports are measured by both CVA MS and SVA MS subject to criterion five. The imports to auxiliary assets may be registered by both CVA MS and SVA MS where: the SVA registered connection is less than [415V / 1kV] There are measures in place to prevent instantaneous through flow from the CVA registered connection to the	A BM Unit does not comprise Plant and Apparatus whose Imports and Exports are measured by both CVA Metering System(s) and SVA Metering System(s) (but subject to auxiliary/back-up Supply exemptions)

© ELEXON Limited 2019

	Iteration one	Iteration two	Iteration three	Iteration four	Final draft
		meet the criteria of being a GSP. There should be measures in place to prevent instantaneous through flow from the Distribution System to the Transmission System or vice versa. Where Plant and Apparatus is connected to more than one point in a Distribution system the configuration should be such that the Plant and Apparatus cannot be deemed to meet the criteria of being a DSCP.	from the Distribution System to the Transmission System or vice versa There should be measures in place to prevent Export onto the Transmission System and Distribution System within the same Settlement Period The Export to the Transmission System and Distribution System should be registered as separate BM Units Where Plant and Apparatus is connected to more than one point in a Distribution System, the configuration should be such that the Plant and Apparatus cannot be deemed to meet the criteria of being a DSCP	SVA registered connection	
Five	Has entered into appropriate Connection Agreements in order to connect to the Total System. Shall include, where appropriate, the configuration is approved by the appropriate System Operator(s)			There are no smaller aggregations of Plant and Apparatus that are covered by criteria one to three (but subject to some size exemptions);	There are no smaller aggregations of Plant and Apparatus that are covered by criteria one to three (but subject to some size exemptions);

© ELEXON Limited 2019

Appendix 4: Glossary & References

Acronyms

Acronyms used in this document are listed in the table below.

Acronyms	
Acronym	Definition
BM	Balancing Mechanism
BR	Business Requirements
BSC	Balancing and Settlement Code
BSCCo	BSC Company
BSCP	BSC Procedure
CCGT	Combined Cycle Gas Turbine
CDCA	Central Data Collection Agent
CfD	Contracts for Difference
CMRS	Central Meter Registration Service
COBMU	Combined Offshore BM Unit
CRA	Central Registration Agent
CSD	Code Subsidiary Document
CVA	Central Volume Allocation
DSCP	Distribution Connection Supply Point
EII	Energy Intensive Industry
GB	Great Britain
GSP	Grid Supply Point
ISG	Imbalance Settlement Group
LV	Low Voltage
MS	Metering System
MVRN	Meter Volume Reallocation Notification
MW	Megawatt
NETSO	National Electricity Transmission System Operator
OCGT	Open Cycle Gas Turbine
PN	Physical Notification
PPM	Power Park Module
SAA	Settlement Administration Agent
SCR	Significant Code Review
SMRS	Supplier Meter Registration Service
SVA	Supplier Volume Allocation
WD	Working Days
WG	Workgroup

© ELEXON Limited 2019

External links

A summary of all hyperlinks used in this document are listed in the table below.

All external documents and URL links listed are correct as of the date of this document.

External Links		
Page(s)	Description	URL
3	ELEXON's review of Metering Dispensation	https://www.elexon.co.uk/meeting/bsc-panel-263/?from_url=https://www.elexon.co.uk/events-calendar-item/bsc-panel-263/
3	P363 'Simplifying the registration of new configurations of BM Units'	https://www.elexon.co.uk/mod-proposal/p363/
3	P364 'Clarifying requirements for registering and maintaining BM Units'	https://www.elexon.co.uk/mod-proposal/p364/
3	BSC Section K 'Classification and registration of Metering Systems and BM units'	https://www.elexon.co.uk/bsc-and-codes/balancing-settlement-code/bsc-sections/
6	BSCP15 'BM Unit Registration'	https://www.elexon.co.uk/bsc-and-codes/bsc-related-documents/bscps/?show=all
12	GC0117, 'Improving transparency and consistency of access arrangements across GB by the creation of pan-GB commonality of PGM requirements',	https://www.nationalgrideso.com/sites/eso/files/documents/PP5
12	The Electricity Safety, Quality and Continuity Regulations 2002	http://www.legislation.gov.uk/uksi/2002/2665/contents/made
12	Code of Practice four	https://www.elexon.co.uk/bsc-and-codes/bsc-related-documents/codes-of-practice/
15	BSC Section F 'Modification Procedures'	https://www.elexon.co.uk/bsc-and-codes/balancing-settlement-code/bsc-sections/
16	BSCP68 'Transfer of Registration of Metering Systems between CMRS and SMRS'	https://www.elexon.co.uk/bsc-and-codes/bsc-related-documents/bscps/?show=all
24	GC0096 'Energy Storage'	https://www.nationalgrideso.com/codes/grid-code/modifications/gc0096-energy-storage
32	Issue 70 'Settlement of Secondary BM Units using metering at the asset'	https://www.elexon.co.uk/smg-issue/issue-70/
34	P344 'Project TERRE'	https://www.elexon.co.uk/mod-proposal/p344/

© ELEXON Limited 2019